Vent-A-Hood®

2025 Vent-A-Hood List Price Book

CANADIAN MSRP PRICE BOOK

January 1, 2026

Redman Distributing Inc.
105 Guthrie Street
Ayr, Ontario, N0B 1E0

TELEPHONE: 519.624.5710
TOLL-FREE: 888.340.4949
sales@redmandistributing.com

TERMS AND CONDITIONS OF SALE

1. Terms:
   a. Net 30 days with approved credit.
2. Prices:
   a. All prices are subject to change at any time without notice.
3. Cancellation:
   a. Hoods which are fabricated to purchase orders are non-cancelable upon acceptance by the factory.
   b. Any change orders must be confirmed in writing to Vent-A-Hood® at the address below and are subject to our ability to conform.

      Redman Distributing Inc
      105 Guthrie Street
      Ayr, Ontario, N0B 1E0
4. Returns:
   a. No merchandise may be returned without written consent and shipping instructions.
   b. Authorized returns are subject to a Minimum 25% restocking charge and freight charges.
   c. Special order items are not subject to return or cancellation.
5. Vent-A-Hood® Warranty
   a. Vent-A-Hood® merchandise is manufactured in accordance with Vent-A-Hood®'s high standards and carries a limited warranty.
   b. Vent-A-Hood® Magic Lung® Warranty:

      Vent-A-Hood® warrants to the original consumer-purchaser its Magic Lung® products to be free of defects in material and workmanship for a period of five years on parts and one year on labor from the date of purchase with the following limitations:

      A. Freight damage
      B. Blower wheel damage
      C. Light bulbs
      D. Damage or malfunction caused by faulty installation
      E. Incidental or consequential damage
      F. Commercial application
      G. Misapplication or modification of or to any part of the Vent-A-Hood® product
   c. Vent-A-Hood® V-Line, ARS, M Series, and Remote Blower Warranty:

      Vent-A-Hood warrants to the original consumer-purchaser its products to be free of defects in material and workmanship for a period of one year from the date of purchase with the following limitations:

      A. Freight damage
      B. Blower wheel damage
      C. Light bulbs
      D. Damage or malfunction caused by faulty installation
      E. Incidental or consequential damage
      F. Commercial application
      G. Misapplication or modification of or to any part of the Vent-A-Hood® product
   d. To make a warranty claim, contact the dealer where the hood was purchased. They will contact the appropriate service agents. It is not necessary to register the product directly with Vent-A-Hood®.

Top Photo on Cover:
Design by Shay Geyer, Owner & Designer, IBB Design
Photography by Dan Piassick

TABLE OF CONTENTS - BY APPLICATION/HOOD TYPE

MAGIC LUNG® 11
UNDER CABINET 12
PRH9 12
NPH9 12
SLH9 12
XRH9 12
CLH9 13
JCWR9 13
WALL MOUNT 14
PROFESSIONAL/STANDARD WALL MOUNT 14
PRH18 14
NPH18 14
SLH18 14
XRH18 15
DAH18 15
PWVH18 15
CXH30 17
DAH30 17
PWVH30 17
SLH30 18
AH12 19
CWH 20
DESIGNER SERIES WALL MOUNT 21
JCH/A1 21
JCH/B1 22
JCH/C1 23
JCH/C2 24
JDH/C1 24
JDH/C2 24
JDH/C3 25
JPH/C1 25
JPH/C2 25
JCWR18 16
DESIGNER 'AS-SHOWN' MODELS 27
C2/AS 27
C2SS/AS-SB & C2SS/AS-MSS 27
BLANK 28
BLANK 28
BLANK 28
CONTEMPORARY WALL MOUNT 29
CWEH9 29
CWLH9 29
CWSH3 30
XLH12 31
ZTH 32
EURO-STYLE WALL MOUNT 33
PDH14 33
PDL14 33
SLDH14 33
EPH18 34
EPTH18 34
NEPH18 34
NEPTH18 34
SEPH18 35
SEPTH18 35
ISLAND 36
DESIGNER SERIES ISLAND 36
JCIH/A1 36
JCIH/B1 36
JCIH/C1 37
JDIH/C1 38
JDIH/C2 38
JDIH/C3 39
CONTEMPORARY ISLAND 40
CIEH9 40
CILH9 40
IZTH 41
EURO-STYLE ISLAND 42
PYDH18 42
ISDH18 42
EPIH18 42
SEPIH18 42
EPITH18 43
SEPITH18 43
OTHER ISLAND STYLES 44
LINER INSERTS 45
WALL MOUNT LINER INSERTS 45
BHSLD 45
BHPSLD 45
BHPSLB 45
TLH 46
ISLAND LINER INSERTS 47
THSLE 47
THPSLE 47
CUSTOM LINER INSERTS 48
BH-LD 48
BH-LB 48
TH-LC 49
TH-LE 49
OTHER ITEMS 50
BLOWER OPTIONS 50
REMOTE BLOWERS 51
SPLASH PANELS 52
WARMING LAMPS & SHELVES 53
ACCESSORY RAIL 54
BBQ EXTENSION 55
BANDS, FINISHES, & POT RAILS 56
BAND & LIP TREATMENT ATTACHMENTS 57
DESIGNER SERIES HOOD TRIMS 58
POWER LUNG 60
UNDER CABINET 61
PRH6-K 61
SLH6-K 61
WALL MOUNT LINER INSERT 61
KHSLD 61
CONTEMPORARY WALL MOUNT 62
CWEH6-K 62
GTH-K 62
CONTEMPORARY ISLAND 62
CIEH6-K 62
EURO-STYLE WALL MOUNT 63
PDH7-K 63
PDH14-K 63
ARS DUCT FREE 64
UNDER CABINET 65
PRAH6-K 65
SLAH6-K 65
WALL MOUNT LINER INSERT 65
KAHSLD 65
CONTEMPORARY WALL MOUNT 66
CWEAH6-K 66
CONTEMPORARY ISLAND 66
CIEAH6-K 66
EURO-STYLE WALL MOUNT 67
PDAH7-K 67
PDAH14-K 67
EURO-STYLE ISLAND 68
PYDAH18-K 68
ISDAH18-K 68
M SERIES 69
PROFESSIONAL WALL MOUNT 70
PRH18-M 70
PRH18-M 30D 70
CXH18-M 70
M SERIES EURO-STYLE WALL MOUNT 71
EPH18-M 71
EPH18-M 32D 71
WALL MOUNT LINER INSERTS 72
MSLD 72
MPSLD 72
PARTS & ACCESSORIES 74
VENTING ACCESSORIES 74
REPLACEMENT PARTS 75

THE INFORMATION IN THIS DOCUMENT IS SUBJECT TO CHANGE AT ANY TIME WITHOUT NOTICE.

TABLE OF CONTENTS - BY MODEL NUMBER

AH12 19
BH-LB 48
BH-LD 48
BHPSLB 45
BHPSLD 45
BHSLD 45
CIEAH6-K 66
CIEH6-K 62
CIEH9 40
CILH9 40
CLH9 13
CWEAH6-K 66
CWEH6-K 62
CWEH9 29
CWH 20
CWLH9 29
CWSH3 30
CXH18-M 70
CXH30 17
DAH18 15
DAH30 17
EPH18 34
EPH18-M 71
EPH18-M 32D 71
EPIH18 42
EPITH18 43
EPTH18 34
GTH-K 62
ISDAH18-K 68
ISDH18 42
IZTH 41
JCH/A1 21
JCH/B1 22
JCH/C1 23
JCH/C2 24
JCIH/A1 36
JCIH/B1 36
JCIH/C1 37
JCWR9 13
JCWR18 16
JDH/C1 24
JDH/C2 24
JDH/C3 25
JDIH/C1 38
JDIH/C2 38
JDIH/C3 39
JPH/C1 25
JPH/C2 25
KAHSLD 65
KHSLD 61
MPSLD 72
MSLD 72
NEPH18 34
NEPTH18 34
NPH9 12
NPH18 14
PDAH7-K 67
PDAH14-K 67
PDH7-K 63
PDH14 33
PDH14-K 63
PDL14 33
PRAH6-K 65
PRH6-K 61
PRH9 12
PRH18 14
PRH18-M 70
PRH18-M 30D 70
PWVH18 15
PWVH30 17
PYDAH18-K 68
PYDH18 42
SEPH18 35
SEPIH18 42
SEPITH18 43
SEPTH18 35
SLAH6-K 65
SLDH14 33
SLH6-K 61
SLH9 12
SLH18 14
SLH30 18
TH-LC 49
TH-LE 49
THPSLE 47
THSLE 47
TLH 46
XLH12 31
XRH9 12
XRH18 15
ZTH 32

THE INFORMATION IN THIS DOCUMENT IS SUBJECT TO CHANGE AT ANY TIME WITHOUT NOTICE.

Vent-A-Hood®

Magic Lung® Whisper Quiet Technology

VS

OTHER BRANDS

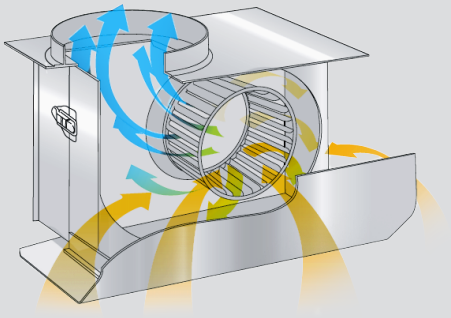

OUR PREMIUM MAGIC LUNG® BLOWER

CONSTANT 99% CENTRIFUGAL GREASE EXTRACTION

Grease Extraction

The patented **Magic Lung®** centrifugal grease extractor collects 99% of the grease 100% of the time (University of Minnesota)

SCREEN/BAFFLE FILTER

5% TO 60% VARIABLE GREASE EXTRACTION

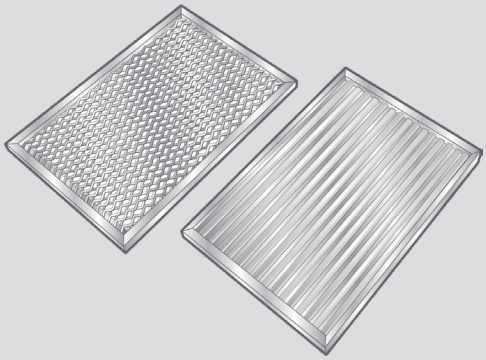

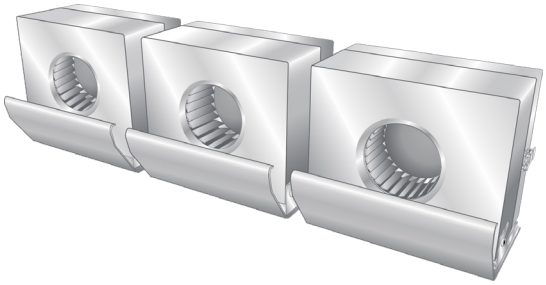

THE QUIETEST VENTILATION AVAILABLE

300 CFM=5.4 SONES
600 CFM=6.5 SONES
900 CFM=6.3 SONES
1200 CFM=6.6 SONES

Quiet and Powerful

Each **Magic Lung®** blower supplies 300 CFM of air flow—combining multiple blowers will meet any air flow requirement without increasing the noise level.
Variable speed blowers become louder and louder as CFM increases.

NOISY VARIABLE SPEED BLOWER

300 CFM=6.0 SONES
600 CFM=9.0 SONES
900 CFM=12.0 SONES
1200 CFM=15.0 SONES

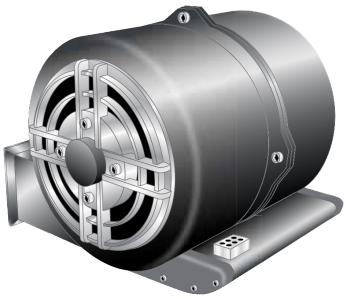

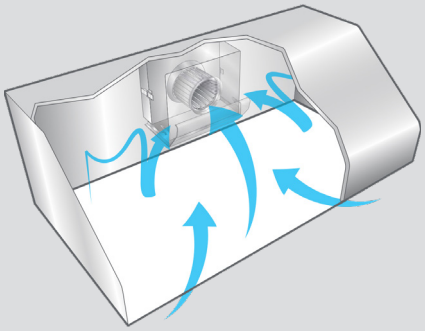

LARGE ACTIVE CANOPY REMOVES CONTAMINANTS

Efficient

Filters obstruct air flow and spoil the collector properties of the canopy.
A range hood equipped with the **Magic Lung®** blower system is a wide open, active collector that invites contaminants in. A proper collector is the most critical element for good cooking ventilation and requires 1/3 less air flow than a filter-style range hood.

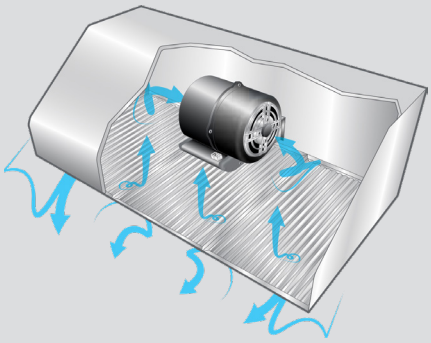

CLOSED CANOPY RESTRICTS AIR FLOW

Vent-A-Hood®

THE VENT-A-HOOD DIFFERENCE

Vent-A-Hood®

Magic Lung® Whisper Quiet Technology

VS

OTHER BRANDS

NEW, SIMPLE SLIDE-OFF GREASE TRAY

BLOWER HOUSING SNAPS APART FOR FAST CLEANING

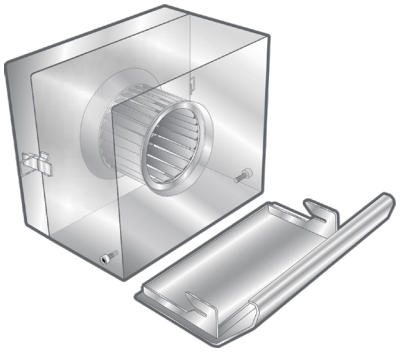

EASY TO CLEAN

Cleaning the grease from behind the filter is nearly impossible.
Access is limited by components and sharp protrusions. Even the motor gets greasy.
The new in-the-shield grease tray makes routine cleaning easier than ever. If desired, the **Magic Lung**® blower comes apart for easy cleaning in soapy water or a dishwasher.

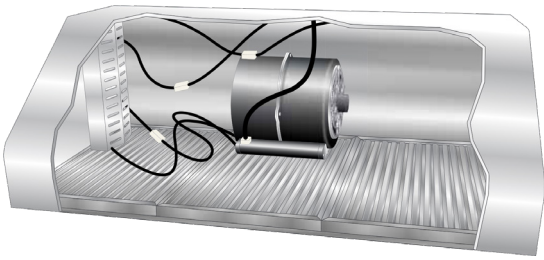

DIFFICULT TO CLEAN

GREASE ESCAPING THE FILTERS COATS THE MOTORS AND WIRING

NO GREASY FILTER TO SUSTAIN A SECONDARY FIRE

FLAME HAS NO ACCESS TO SECONDARY SOURCES OF COMBUSTION

FIRE SAFETY

The **Magic Lung**® constant-speed blower is designed to keep grease and flame from entering the duct.
In over 75 years, Vent-A-Hood has never received a report of an attic or wall fire when the **Magic Lung**® has been in use.

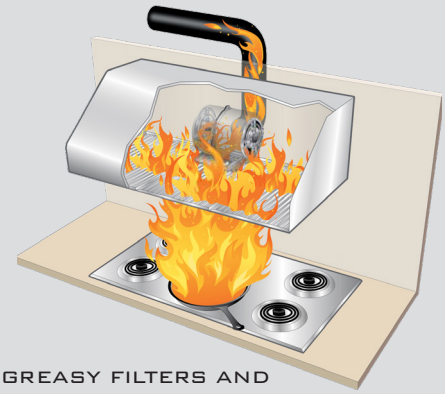

GREASY FILTERS AND DUCTING ARE FLAMMABLE

FLAME HAS DIRECT ACCESS TO MULTIPLE SOURCES OF COMBUSTION

5 YEAR WARRANTY

WARRANTY

1 YEAR WARRANTY

We've got you covered with the best warranty in the industry.
Vent-A-Hood® has long been the most respected name in ventilation. Our products are guaranteed to work and we stand on over 75 years of manufacturing the highest quality ventilation products.
Our family is devoted to your satisfaction.

KEYS TO SUPERIOR VENTILATION

BLOWER(S) • CANOPY • DUCTING

- The first question you should ask a customer is how many BTUs or wattage are produced by the type of cooking equipment that is in their kitchen.
- The hood, blower system and ducting should be designed to handle the heat being produced from the cooking surface.
- Refer to chart below to determine how many CFM (Cubic Feet per Minute) are needed.

Match Number of Blowers to Cooking Equipment

HOOD TYPE	COOKING EQUIPMENT TYPES: MULTI-BURNER COOKTOP RATING (BTU/WATTS)	COOKING EQUIPMENT TYPES: BBQ, WOK OR GRIDDLE (BTU/WATTS)	MAGIC LUNG® BLOWER(S) (TRUE CFM)	COMPETITOR EQUIVALENT CFM*
WALL-MOUNT OR UNDER CABINET	12,000 WATTS	12,000 WATTS	240 CFM K SERIES BLOWER 300 CFM B100 SINGLE BLOWER	360 CFM 450 CFM
UNDER-CABINET	40,000 - 60,000 BTU 24,000 WATTS	40,000 - 60,000 BTU 24,000 WATTS	600 CFM (B200 DUAL BLOWER)	900 CFM
WALL-MOUNT	40,000 - 60,000 BTU	40,000 - 60,000 BTU 24,000 WATTS	600 CFM (B200 DUAL BLOWER)	900 CFM
WALL-MOUNT	60,000 - 90,000 BTU	60,000 BTU 36,000 WATTS	900 CFM (ONE B100 SINGLE BLOWER PLUS ONE B200 DUAL BLOWER)	1350 CFM
WALL-MOUNT	80,000 - 120,000 BTU	80,000 BTU 48,000 WATTS	1200 CFM (TWO B200 DUAL BLOWERS)	1800 CFM
ISLAND	40,000 - 60,000 BTU	40,000 BTU 24,000 WATTS	550 CFM (T200 ISLAND DUAL BLOWER)	900 CFM
ISLAND	80,000 - 120,000 BTU	80,000 BTU 48,000 WATTS	1100 CFM (T400 ISLAND CLUSTER BLOWER)	1800 CFM

* Because the Magic Lung® uses centrifugal filtration units rather than conventional baffle or mesh filters, the Magic Lung® Blower can handle cooking equipment with higher cubic feet per minute (CFM) requirements and is much more efficient than other filtration systems. When comparing Magic Lung® blowers to that of other competitor units, Magic Lung CFM ratings reflect true CFM ratings. For example, a competitor's 1800 CFM blower unit has a performance equivalent CFM of 1200 CFM.

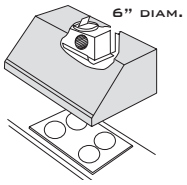

*
- 300 CFM (450 CFM EQUIVALENT)
- B100 SINGLE BLOWER
- 6" DIAMETER VENT

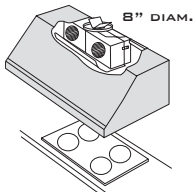

*
- 600 CFM (900 CFM EQUIVALENT)
- B200 DUAL BLOWER
- 8" DIAMETER VENT

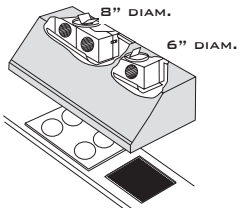

*
- 900 CFM (1,350 CFM EQUIVALENT)
- B200 DUAL & B100 SINGLE BLOWER
- 8" AND 6" DIAMETER VENTS
- VP562 MULTI BLOWER TRANSITION

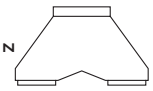

VP562
(6" AND 8" TO 10")

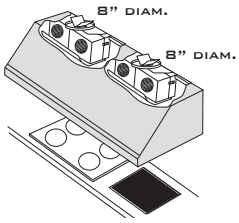

*
- 1200 CFM (1,800 CFM EQUIVALENT)
- TWO B200 DUAL BLOWERS
- TWO 8" DIAMETER VENTS
- VP563 MULTI BLOWER TRANSITION

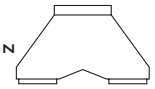

VP563
(8" AND 8" TO 12")

KEYS TO SUPERIOR VENTILATION

CANOPY SIZE AND PLACEMENT

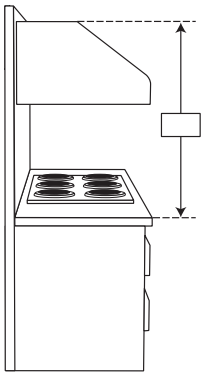

WHAT HEIGHT HOOD DO YOU NEED?

THE HOOD HEIGHT IS DEPENDENT UPON THE DISTANCE BETWEEN YOUR COOKING SURFACE AND YOUR CABINET, SOFFIT, OR CEILING.

- ☐ 6" UNDER CABINET – FOR 27" TO 30"
- ☐ 9" UNDER CABINET – FOR 30" TO 33"
- ☐ 18" WALL MOUNT – FOR 48"+
- ☐ 30" WALL MOUNT – FOR 60"+

WHAT WIDTH HOOD DO YOU NEED?

WHEREVER POSSIBLE, THE WIDTH OF THE HOOD SHOULD OVERLAP THE BURNERS 3"-6" ON EACH SIDE. THIS IS A MUST FOR ISLANDS.

☐ 30" ☐ 36" ☐ 42" ☐ 48"
☐ 54" ☐ 60" ☐ 66" ☐ CUSTOM

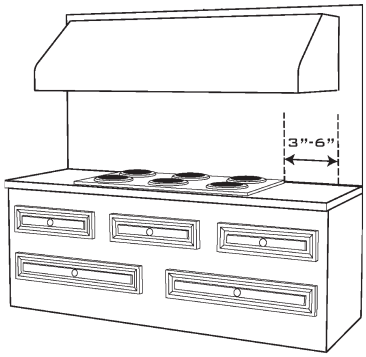

WHAT DEPTH HOOD DO YOU NEED?

THE HOOD SHOULD BE DEEP ENOUGH TO COVER ALL BURNERS.

- ☐ UNDER CABINET 19-1/2" OR 21" (STANDARD)
- ☐ WALL MOUNT 24" STANDARD - MOST PRO-STYLE
  27" PRO-STYLE COOKING
- ☐ ISLAND HOOD 27" STANDARD COOKING
  30" PRO-STYLE COOKING

DUCTING - USE CORRECT SIZE AND INSTALL PROPERLY

DUCTING DO'S AND DON'TS

- NEVER RESTRICT DUCT SIZE
- RUN THE DUCT AS SHORT AND STRAIGHT AS POSSIBLE
- ENLARGE THE DUCT FOR LONGER RUNS (OVER 20°)
- SEAL ALL JOINTS WITH DUCT TAPE
- MAINTAIN 4 TO 5 FOOT SPACING BETWEEN TURNS
- TURNS SHOULD BE SMOOTH AND GRADUAL

DUCT SIZES

12 INCH ROUND DUCT = 113 SQUARE INCHES OF SPACE
10 INCH ROUND DUCT = 79 SQUARE INCHES OF SPACE
8 INCH ROUND DUCT = 50 SQUARE INCHES OF SPACE
7 INCH ROUND DUCT = 38 SQUARE INCHES OF SPACE
6 INCH ROUND DUCT = 28 SQUARE INCHES OF SPACE
4 INCH ROUND DUCT = 13 SQUARE INCHES OF SPACE

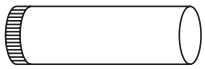

SMOOTH WALLED DUCT

FLEXIBLE DUCT

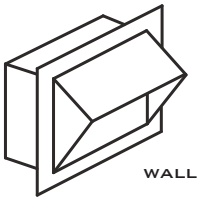

WALL LOUVER

6" ROUND VP526
8" ROUND VP528
10" ROUND VP554
12" ROUND VP555

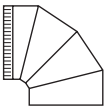

SMOOTH GRADUAL TURN

SHARP ANGLED TURN

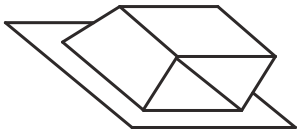

ROOF JACK

6" ROUND VP539-HP
8" ROUND VP541-HP
10" ROUND VP552-HP
12" ROUND VP553-HP

*INCLUDES GRAVITY DAMPER – USING OTHER LIKE PRODUCTS MAY JEOPARDIZE PERFORMANCE

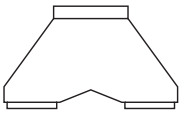

PROPER COMBINING OF TWO DUCTS

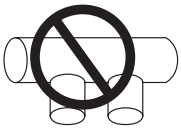

IMPROPER COMBINING OF TWO DUCTS

Magic Lung®
Range Hoods

UNDER CABINET

REC. MOUNTING HEIGHT FROM COOKING SURFACE: 24"-27"

900 CFM OPTIONAL TRANSITION TO 10" ROUND: VP562
1200 CFM OPTIONAL TRANSITION TO 12" ROUND: VP563

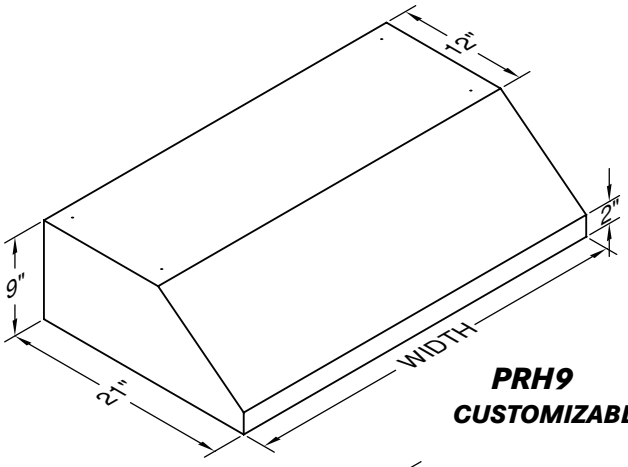

PRH9
CUSTOMIZABLE!

PRH9

Model No.	CFM	Width	Painted	Stainless	Overlay •	#Lts
PRH9-130	300	30"	1,512	1,922	2,920	2
PRH9-136		36"	1,512	1,922	2,920	2
PRH9-142		42"	1,799	2,209	3,294	3
PRH9-148		48"	1,892	2,304	3,386	3
PRH9-230	600	30"	2,177	2,642	3,577	2
PRH9-236		36"	2,177	2,642	3,577	2
PRH9-242		42"	2,458	2,931	3,953	3
PRH9-248		48"	2,549	3,023	4,044	3
PRH9-342	900	42"	3,156	3,791	4,651	3
PRH9-348		48"	3,248	3,886	4,741	3
PRH9-448	1200	48"	3,906	4,605	5,401	3

• FOR OVERLAY MODELS, SPECIFY INTERIOR COLOR.

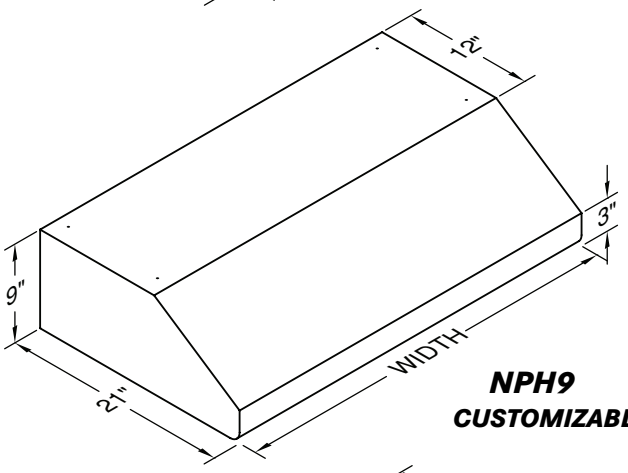

NPH9
CUSTOMIZABLE!

NPH9

Model No.	CFM	Width	Painted	Stainless	Overlay •	#Lts
NPH9-130	300	30"	1,835	2,423	3,585	2
NPH9-136		36"	1,835	2,423	3,585	2
NPH9-142		42"	2,211	2,847	4,097	3
NPH9-148		48"	2,323	2,962	4,232	3
NPH9-230	600	30"	2,492	3,144	4,243	2
NPH9-236		36"	2,492	3,144	4,243	2
NPH9-242		42"	2,869	3,566	4,752	3
NPH9-248		48"	2,981	3,683	4,889	3
NPH9-342	900	42"	3,566	4,431	5,452	3
NPH9-348		48"	3,679	4,544	5,589	3
NPH9-448	1200	48"	4,336	5,266	6,246	3

• FOR OVERLAY MODELS, SPECIFY INTERIOR COLOR.

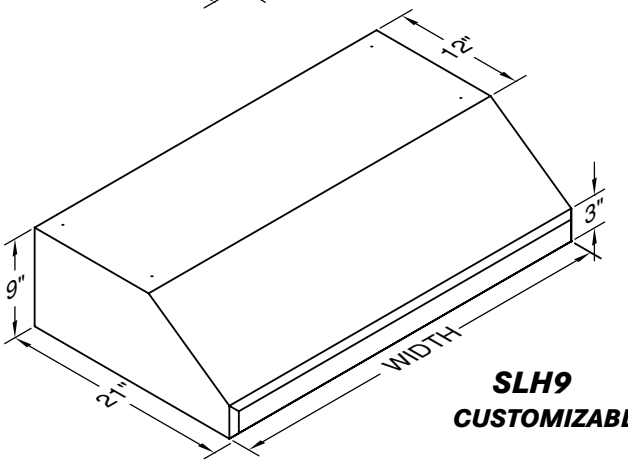

SLH9
CUSTOMIZABLE!

SLH9

Model No.	CFM	Width	Painted	Stainless	Overlay •	#Lts
SLH9-130	300	30"	1,835	2,423	3,585	2
SLH9-136		36"	1,835	2,423	3,585	2
SLH9-142		42"	2,211	2,847	4,097	3
SLH9-148		48"	2,323	2,962	4,232	3
SLH9-230	600	30"	2,492	3,144	4,243	2
SLH9-236		36"	2,492	3,144	4,243	2
SLH9-242		42"	2,869	3,566	4,752	3
SLH9-248		48"	2,981	3,683	4,889	3
SLH9-342	900	42"	3,566	4,431	5,452	3
SLH9-348		48"	3,679	4,544	5,589	3
SLH9-448	1200	48"	4,336	5,266	6,246	3

• FOR OVERLAY MODELS, SPECIFY INTERIOR COLOR.

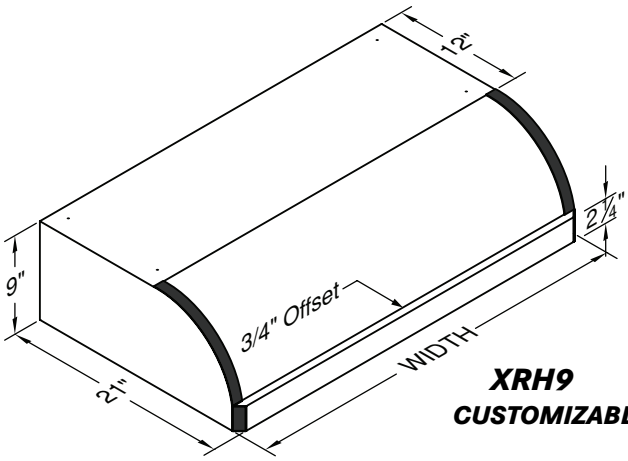

XRH9
CUSTOMIZABLE!

XRH9

Model No.	CFM	Width	Painted	Stainless	Overlay •	#Lts
XRH9-130	300	30"	1,922	2,548	3,777	2
XRH9-136		36"	1,922	2,548	3,777	2
XRH9-142		42"	2,260	2,919	4,184	3
XRH9-148		48"	2,380	3,035	4,325	3
XRH9-230	600	30"	2,580	3,271	4,434	2
XRH9-236		36"	2,580	3,271	4,434	2
XRH9-242		42"	2,920	3,638	4,844	3
XRH9-248		48"	3,037	3,755	4,982	3
XRH9-342	900	42"	3,617	4,501	5,541	3
XRH9-348		48"	3,737	4,619	5,681	3
XRH9-448	1200	48"	4,394	5,339	6,337	3

• FOR OVERLAY MODELS, SPECIFY INTERIOR COLOR.
• THERE ARE NO STANDARD BANDS ON OVERLAY MODELS.
1" SS BANDS INCLUDED ON PAINTED AND STAINLESS MODELS.

THE INFORMATION IN THIS DOCUMENT IS SUBJECT TO CHANGE AT ANY TIME WITHOUT NOTICE.

UNDER CABINET

REC. MOUNTING HEIGHT FROM COOKING SURFACE: 24"-27"	***900 CFM OPTIONAL TRANSITION TO 10" ROUND: VP562*** ***1200 CFM OPTIONAL TRANSITION TO 12" ROUND: VP563***

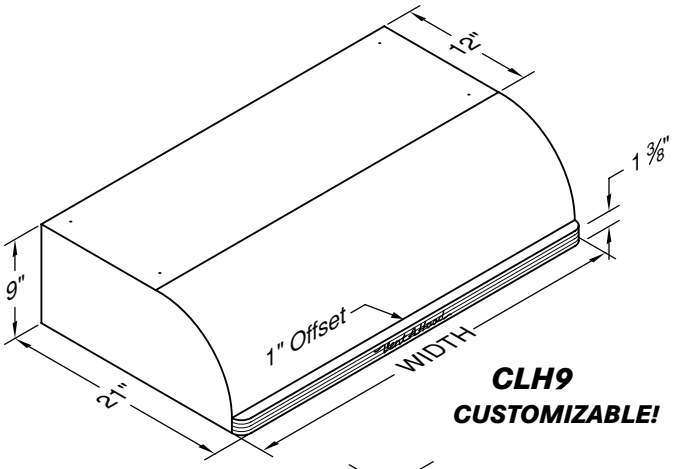

CLH9
CUSTOMIZABLE!

CLH9

Model No.	CFM	Width	Painted	#Lts
CLH9-130	300	30"	1,903	2
CLH9-136		36"	1,903	2
CLH9-142		42"	2,240	3
CLH9-148		48"	2,357	3
CLH9-230	600	30"	2,555	2
CLH9-236		36"	2,555	2
CLH9-242		42"	2,892	3
CLH9-248		48"	3,007	3
CLH9-342	900	42"	3,583	3
CLH9-348		48"	3,703	3
CLH9-448	1200	48"	4,353	3

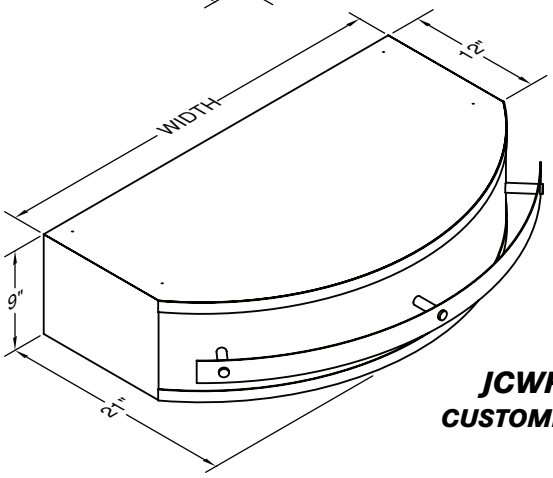

JCWR9
CUSTOMIZABLE!

JCWR9

Model No.	CFM	Width	Stainless	#Lts
JCWR9-130	300	30"	3,299	2
JCWR9-136		36"	3,321	2
JCWR9-142		42"	3,706	3
JCWR9-148		48"	3,846	3
JCWR9-230	600	30"	3,948	2
JCWR9-236		36"	3,974	2
JCWR9-242		42"	4,358	3
JCWR9-248		48"	4,496	3
JCWR9-342	900	42"	5,337	3
JCWR9-348		48"	5,485	3
JCWR9-448	1200	48"	5,841	3

9" TALL UNDER CABINET VARIATIONS

WIDTHS OVER 48"

	PAINTED	STAINLESS	OVERLAY
FOR EACH 6" INCREMENT	332	477	592
PLUS		428	

SPECIAL WIDTH (LESS THAN 48")
USE NEXT LARGEST SIZE ON PRICE LIST,
PLUS 428

STAINLESS STEEL INTERIOR ON OVERLAY HOOD
SUBTRACT PAINTED HOOD PRICE FROM STAINLESS HOOD PRICE

CUSTOM COLOR (SEE CUSTOM COLOR CHART)
ADD 1340

SPECIAL BLOWER LOCATION
LEFT TO RIGHT, SPECIFY COLLAR CENTERLINE
ADD 428

REMOTE BLOWER OPTIONS
SEE PAGES 50-51 FOR REMOTE BLOWER OPTIONS

TRIM OPTIONS
XR HOOD TRIM, NON-STANDARD COLOR 214
JCWR9/XR HOOD TRIM, REMOVE 214
SEE PAGES 56-57 FOR FINISH AND TRIM OPTIONS

WARMING LAMPS AND SHELVES
SEE PAGES 53 FOR WARMING LAMP AND SHELF OPTIONS

THE INFORMATION IN THIS DOCUMENT IS SUBJECT TO CHANGE AT ANY TIME WITHOUT NOTICE.

PROFESSIONAL/STANDARD WALL MOUNT

REC. MOUNTING HEIGHT FROM COOKING SURFACE: 30"

900 CFM OPTIONAL TRANSITION TO 10" ROUND: VP562
1200 CFM OPTIONAL TRANSITION TO 12" ROUND: VP563

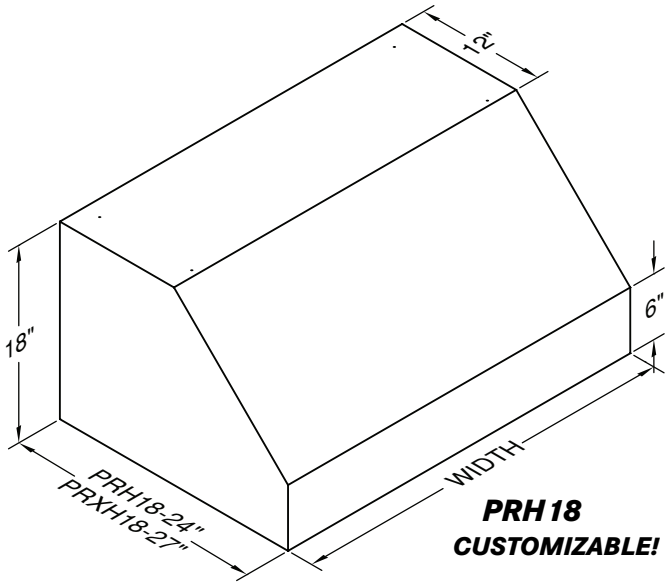

PRH18
CUSTOMIZABLE!

PRH18/PRXH18

Model No.	CFM	Width	Painted	Stainless	Overlay •	# Lts
PRH18-130	300	30"	2,321	3,181	4,794	2
PRH18-136		36"	2,366	3,226	4,997	2
PRH18-142		42"	2,703	3,516	5,519	3
PRH18-148		48"	2,841	3,723	5,795	3
PRH18-230	600	30"	3,009	3,936	5,482	2
PRH18-236		36"	3,055	3,978	5,685	2
PRH18-242		42"	3,391	4,269	6,208	3
PRH18-248		48"	3,645	4,476	6,483	3
PRH18-254		54"	4,141	5,407	7,576	4
PRH18-342	900	42"	4,120	5,174	6,940	3
PRH18-348		48"	4,259	5,381	7,214	3
PRH18-354		54"	4,872	6,312	8,309	4
PRH18-360		60"	5,260	6,840	8,970	4
PRH18-448	1200	48"	4,948	6,132	7,902	3
PRH18-454		54"	5,560	7,065	8,994	4
PRH18-460		60"	5,951	7,595	9,660	4
PRH18-466		66"	6,199	7,753	10,184	4

USE PRXH18 MODEL NUMBER PREFIX FOR 27" DEPTH PROJECTION.
• FOR OVERLAY MODELS, SPECIFY INTERIOR COLOR.

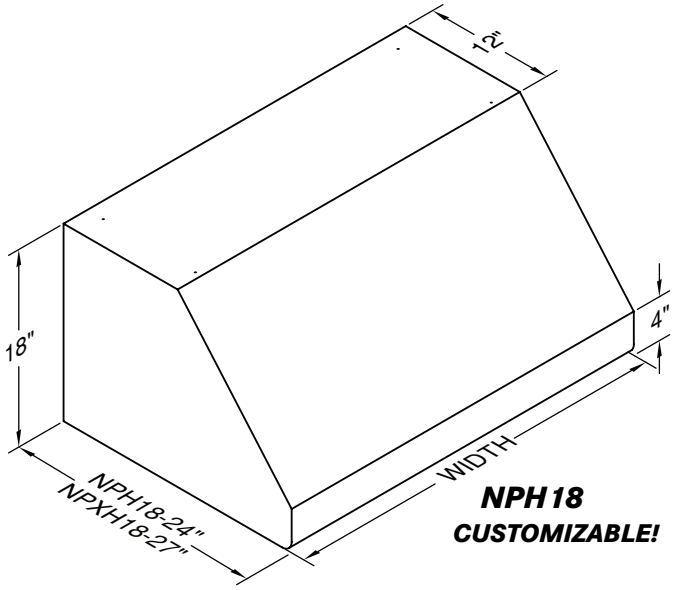

NPH18
CUSTOMIZABLE!

NPH18/NPXH18

Model No.	CFM	Width	Painted	Stainless	Overlay •	# Lts
NPH18-130	300	30"	3,099	4,049	5,572	2
NPH18-136		36"	3,148	4,095	5,780	2
NPH18-142		42"	3,596	4,408	6,298	3
NPH18-148		48"	3,617	4,592	6,570	3
NPH18-230	600	30"	3,788	4,805	6,260	2
NPH18-236		36"	3,832	4,850	6,466	2
NPH18-242		42"	4,170	5,162	6,985	3
NPH18-248		48"	4,307	5,344	7,261	3
NPH18-254		54"	4,918	6,188	8,352	4
NPH18-342	900	42"	4,900	6,067	7,721	3
NPH18-348		48"	5,039	6,249	7,991	3
NPH18-354		54"	5,650	7,093	9,088	4
NPH18-360		60"	6,039	7,617	9,775	4
NPH18-448	1200	48"	5,729	7,005	8,680	3
NPH18-454		54"	6,337	7,845	9,775	4
NPH18-460		60"	6,727	8,371	10,464	4
NPH18-466		66"	7,005	8,691	10,965	4

USE NPXH18 MODEL NUMBER PREFIX FOR 27" DEPTH PROJECTION.
• FOR OVERLAY MODELS, SPECIFY INTERIOR COLOR.

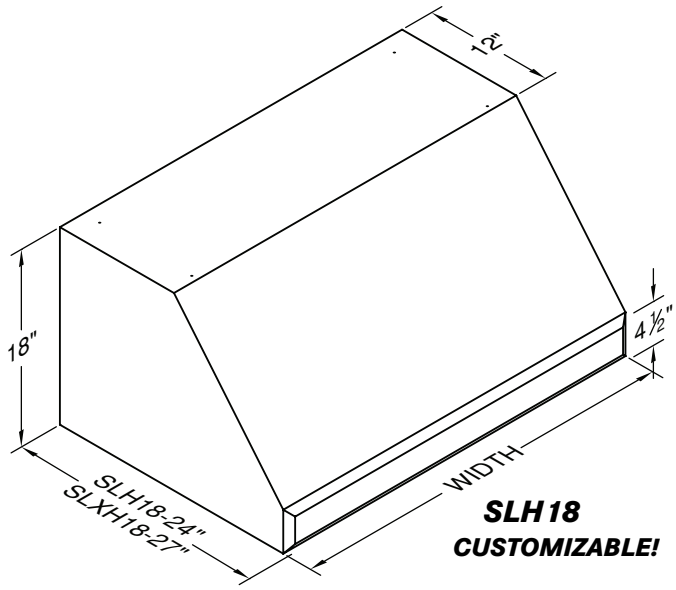

SLH18
CUSTOMIZABLE!

SLH18/SLXH18

Model No.	CFM	Width	Painted	Stainless	Overlay •	# Lts
SLH18-130	300	30"	3,099	4,049	5,572	2
SLH18-136		36"	3,148	4,095	5,780	2
SLH18-142		42"	3,596	4,408	6,298	3
SLH18-148		48"	3,617	4,592	6,570	3
SLH18-230	600	30"	3,788	4,805	6,260	2
SLH18-236		36"	3,832	4,850	6,466	2
SLH18-242		42"	4,170	5,162	6,985	3
SLH18-248		48"	4,307	5,344	7,261	3
SLH18-254		54"	4,918	6,188	8,352	4
SLH18-342	900	42"	4,900	6,067	7,721	3
SLH18-348		48"	5,039	6,249	7,991	3
SLH18-354		54"	5,650	7,093	9,088	4
SLH18-360		60"	6,039	7,617	9,775	4
SLH18-448	1200	48"	5,729	7,005	8,680	3
SLH18-454		54"	6,337	7,845	9,775	4
SLH18-460		60"	6,727	8,371	10,464	4
SLH18-466		66"	7,005	8,691	10,965	4

USE SLXH18 MODEL NUMBER PREFIX FOR 27" DEPTH PROJECTION.
• FOR OVERLAY MODELS, SPECIFY INTERIOR COLOR.

THE INFORMATION IN THIS DOCUMENT IS SUBJECT TO CHANGE AT ANY TIME WITHOUT NOTICE.

PROFESSIONAL/STANDARD WALL MOUNT

REC. MOUNTING HEIGHT FROM COOKING SURFACE: 30"

900 CFM OPTIONAL TRANSITION TO 10" ROUND: VP562
1200 CFM OPTIONAL TRANSITION TO 12" ROUND: VP563

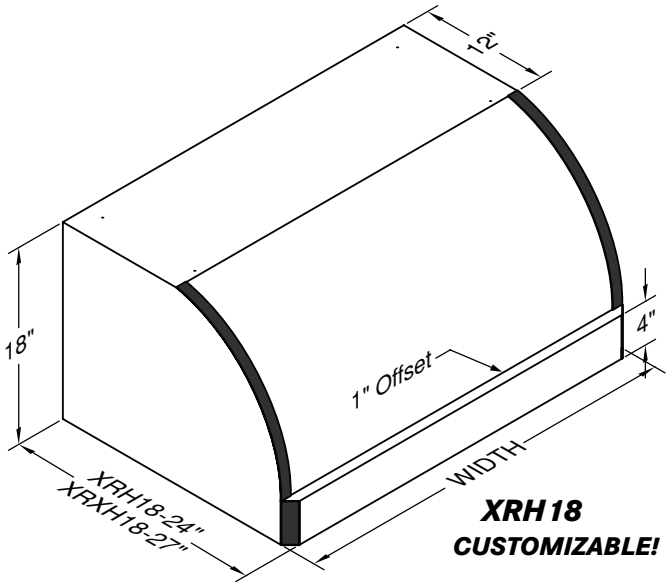

XRH18
CUSTOMIZABLE!

XRH18/XRXH18

Model No.	CFM	Width	Painted	Stainless	Overlay •	# Lts
XRH18-130	300	30"	3,099	4,049	5,572	2
XRH18-136		36"	3,148	4,095	5,780	2
XRH18-142		42"	3,596	4,408	6,298	3
XRH18-148		48"	3,617	4,592	6,570	3
XRH18-230	600	30"	3,788	4,805	6,260	2
XRH18-236		36"	3,832	4,850	6,466	2
XRH18-242		42"	4,170	5,162	6,985	3
XRH18-248		48"	4,307	5,344	7,261	3
XRH18-254		54"	4,918	6,188	8,352	4
XRH18-342	900	42"	4,900	6,067	7,721	3
XRH18-348		48"	5,039	6,249	7,991	3
XRH18-354		54"	5,650	7,093	9,088	4
XRH18-360		60"	6,039	7,617	9,775	4
XRH18-448	1200	48"	5,729	7,005	8,680	3
XRH18-454		54"	6,337	7,845	9,775	4
XRH18-460		60"	6,727	8,371	10,464	4
XRH18-466		66"	7,005	8,691	10,965	4

USE XRXH18 MODEL NUMBER PREFIX FOR 27" DEPTH PROJECTION.
• FOR OVERLAY MODELS, SPECIFY INTERIOR COLOR.
• THERE ARE NO STANDARD BANDS ON OVERLAY MODELS.
1" SS BANDS INCLUDED ON PAINTED AND STAINLESS MODELS.

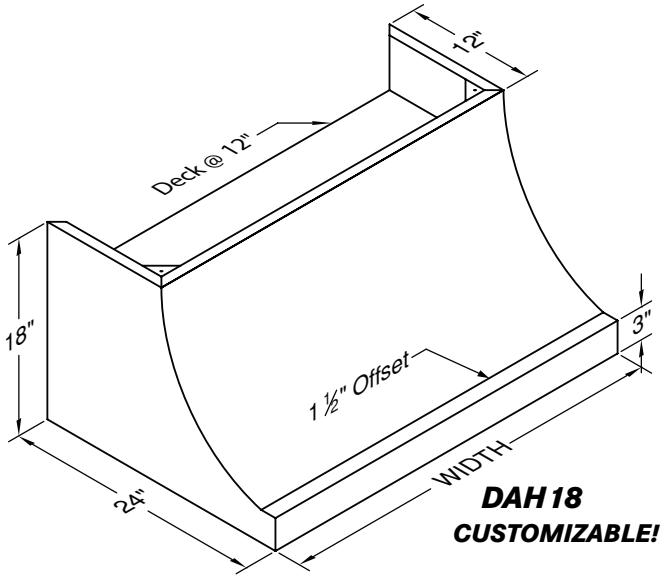

DAH18
CUSTOMIZABLE!

DAH18

Model No.	CFM	Width	Painted	Stainless	Overlay •	# Lts
DAH18-130	300	30"	3,555	4,560	6,162	2
DAH18-136		36"	3,627	4,631	6,378	2
DAH18-142		42"	3,971	4,931	6,915	3
DAH18-148		48"	4,141	5,148	7,200	3
DAH18-230	600	30"	4,241	5,311	6,850	2
DAH18-236		36"	4,313	5,384	7,065	2
DAH18-242		42"	4,661	5,684	7,604	3
DAH18-248		48"	4,828	5,901	7,890	3
DAH18-254		54"	5,438	6,777	9,026	4
DAH18-342	900	42"	5,390	6,589	8,335	3
DAH18-348		48"	5,560	6,806	8,621	3
DAH18-354		54"	6,168	7,682	9,757	4
DAH18-360		60"	6,576	8,234	10,451	4
DAH18-448	1200	48"	6,249	7,559	9,310	3
DAH18-454		54"	6,857	8,436	10,447	4
DAH18-460		60"	7,264	8,987	11,139	4
DAH18-466		66"	7,527	9,326	11,690	4

• FOR OVERLAY MODELS, SPECIFY INTERIOR COLOR.

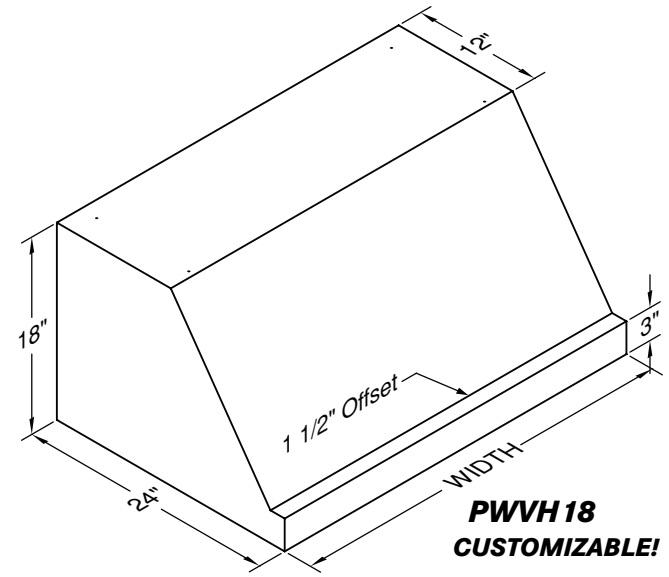

PWVH18
CUSTOMIZABLE!

PWVH18

Model No.	CFM	Width	Painted	Stainless	Overlay •	# Lts
PWVH18-130	300	30"	3,555	4,560	6,162	2
PWVH18-136		36"	3,627	4,631	6,378	2
PWVH18-142		42"	3,971	4,931	6,915	3
PWVH18-148		48"	4,141	5,148	7,200	3
PWVH18-230	600	30"	4,241	5,311	6,850	2
PWVH18-236		36"	4,313	5,384	7,065	2
PWVH18-242		42"	4,661	5,684	7,604	3
PWVH18-248		48"	4,828	5,901	7,890	3
PWVH18-254		54"	5,438	6,777	9,026	4
PWVH18-342	900	42"	5,390	6,589	8,335	3
PWVH18-348		48"	5,560	6,806	8,621	3
PWVH18-354		54"	6,168	7,682	9,757	4
PWVH18-360		60"	6,576	8,234	10,451	4
PWVH18-448	1200	48"	6,249	7,559	9,310	3
PWVH18-454		54"	6,857	8,436	10,447	4
PWVH18-460		60"	7,264	8,987	11,139	4
PWVH18-466		66"	7,527	9,326	11,690	4

• FOR OVERLAY MODELS, SPECIFY INTERIOR COLOR.

THE INFORMATION IN THIS DOCUMENT IS SUBJECT TO CHANGE AT ANY TIME WITHOUT NOTICE.

PROFESSIONAL/STANDARD WALL MOUNT

REC. MOUNTING HEIGHT FROM COOKING SURFACE: 30"

900 CFM OPTIONAL TRANSITION TO 10" ROUND: VP562
1200 CFM OPTIONAL TRANSITION TO 12" ROUND: VP563

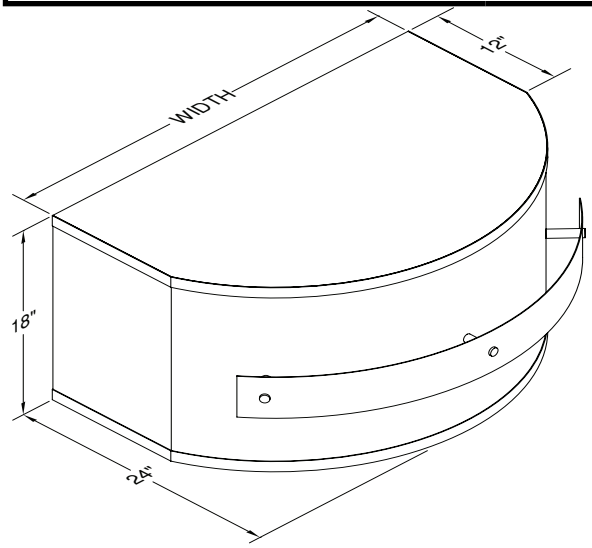

JCWR18

JCWR18

Model No.	CFM	Width	Stainless	# Lts
JCWR18-130	300	30"	4,990	2
JCWR18-136		36"	5,111	2
JCWR18-142		42"	5,505	3
JCWR18-148		48"	5,696	3
JCWR18-230	600	30"	5,657	2
JCWR18-236		36"	5,777	2
JCWR18-242		42"	6,173	3
JCWR18-248		48"	6,364	3
JCWR18-254		54"	7,556	4
JCWR18-342	900	42"	6,881	3
JCWR18-348		48"	7,073	3
JCWR18-354		54"	8,262	4
JCWR18-360		60"	8,984	4
JCWR18-448	1200	48"	7,739	3
JCWR18-454		54"	8,930	4
JCWR18-460		60"	9,652	4
JCWR18-466		66"	9,702	4

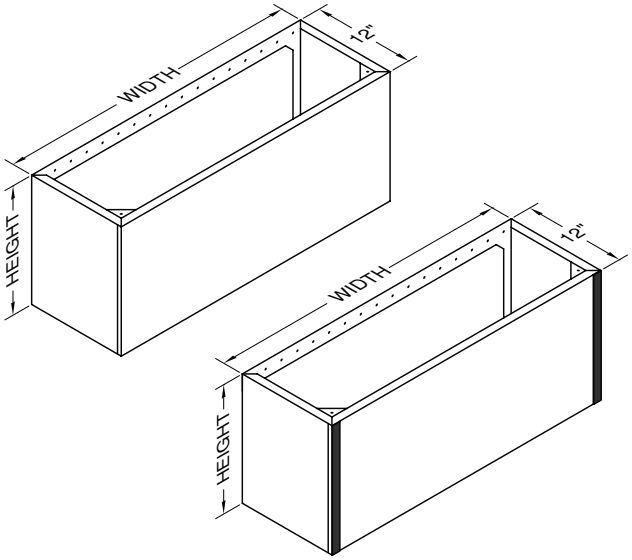

WDCRND/XDCRND

Model No.	Width	Height	Painted	Stainless	Overlay	Ceiling
WDCRND-30	30"	12"	969	1,143	1,408	8'
WDCRND-30/24		24"	1,275	1,605	2,153	9'
WDCRND-30/36		36"	1,559	2,088	2,878	10'
WDCRND-36	36"	12"	1,034	1,230	1,559	8'
WDCRND-36/24		24"	1,383	1,802	2,441	9'
WDCRND-36/36		36"	1,759	2,374	3,319	10'
WDCRND-42	42"	12"	1,101	1,340	1,692	8'
WDCRND-42/24		24"	1,518	2,000	2,726	9'
WDCRND-42/36		36"	1,934	2,659	3,759	10'
WDCRND-48	48"	12"	1,143	1,430	1,846	8'
WDCRND-48/24		24"	1,627	2,177	3,034	9'
WDCRND-48/36		36"	2,111	2,925	4,196	10'
WDCRND-54	54"	12"	1,208	1,518	2,000	8'
WDCRND-60	60"	12"	1,275	1,605	2,153	8'
WDCRND-66	66"	12"	1,340	1,716	2,285	8'
CUSTOM	WIDTH X HEIGHT X		1.00	1.50	2.00	
	PLUS		734			
FINISHED TOP	WIDTH X DEPTH X		1.00	1.50	2.00	
	PLUS		428			
SLOPED TOP•	ADD		734			

USE XDCRND MODEL NUMBER PREFIX FOR XRH18/XRXH18 HOODS.
1" SS BANDS INCLUDED ON PAINTED AND STAINLESS XDCRND MODELS.
CEILING BASED ON REC. MAXIMUM MOUNTING HEIGHT FOR 18"T WALL MOUNT HOOD.
•SPECIFY FRONT TO BACK OR LEFT TO RIGHT DIMENSIONS.

18" TALL WALL MOUNT HOOD VARIATIONS

WIDTHS OVER 66"

	PAINTED	STAINLESS	OVERLAY
FOR EACH 6" INCREMENT	332	477	592
PLUS		428	

SPECIAL WIDTH (LESS THAN 66")
USE NEXT LARGEST SIZE ON PRICE LIST,
PLUS 428

SPECIAL HEIGHT (LESS THAN STANDARD HOOD HEIGHT)
USE STANDARD HOOD PRICE,
PLUS 734

DEPTH OVER 24" (EXCLUDING 27" WHERE APPLICABLE)

	PAINTED	STAINLESS	OVERLAY
WIDTH X EXTRA DEPTH X	2	3	4
PLUS		734	

SPECIAL DEPTH (LESS THAN 24")
USE STANDARD HOOD PRICE,
PLUS 734

SLOPE, LIP, OFFSET, OR TOP VARIATION
PER VARIATION, ADD 734

CONCAVE, CONVEX, SLOPED END (NON-OVERLAY SL MODELS)
TOP WIDTH REDUCED BY 6" EACH. PER END, ADD 734

CLIPPED CORNER (NON-NP/SL/XR MODELS)
PER CORNER, ADD 734

SPECIAL BLOWER LOCATION
LEFT TO RIGHT, SPECIFY COLLAR CENTERLINE
ADD 428

SPECIAL DECK (9" MINIMUM)
ADD 428

STAINLESS STEEL INTERIOR ON OVERLAY HOOD
SUBTRACT PAINTED HOOD PRICE FROM STAINLESS HOOD PRICE

ADDITIONAL BLOWERS & LIGHTS
SEE PAGE 50 FOR BLOWER OPTIONS

REMOTE BLOWER OPTIONS
SEE PAGES 50-51 FOR REMOTE BLOWER OPTIONS

CUSTOM COLOR (SEE CUSTOM COLOR CHART)
ADD 1340

TRIM OPTIONS
XR HOOD TRIM, NON-STANDARD COLOR 214
JCWR18/XR HOOD TRIM, REMOVE 214
SEE PAGES 56-57 FOR FINISH AND TRIM OPTIONS

WARMING LAMPS AND SHELVES
SEE PAGES 53 FOR WARMING LAMP AND SHELF OPTIONS

THE INFORMATION IN THIS DOCUMENT IS SUBJECT TO CHANGE AT ANY TIME WITHOUT NOTICE.

PROFESSIONAL/STANDARD WALL MOUNT

REC. MOUNTING HEIGHT FROM COOKING SURFACE: 30"

900 CFM OPTIONAL TRANSITION TO 10" ROUND: VP562
1200 CFM OPTIONAL TRANSITION TO 12" ROUND: VP563

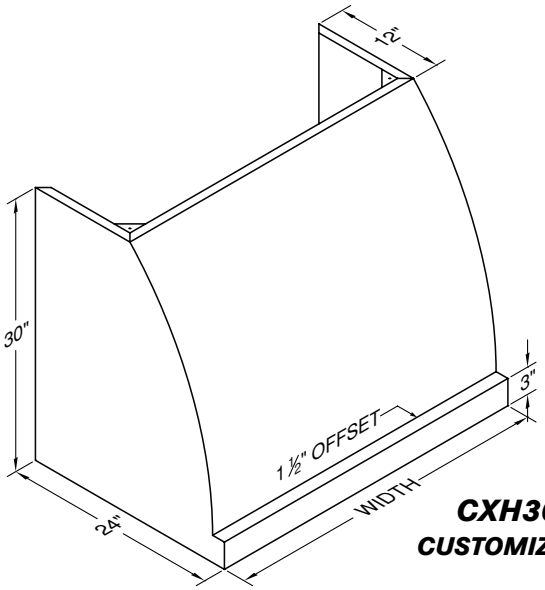

CXH30
CUSTOMIZABLE!

CXH30

Model No.	CFM	Width	Painted	Stainless	Overlay •	# Lts
CXH30-130	300	30"	4,659	6,292	8,841	2
CXH30-136		36"	4,907	6,637	9,483	2
CXH30-142		42"	5,435	7,263	10,475	3
CXH30-148		48"	5,782	7,708	11,215	3
CXH30-230	600	30"	5,348	7,045	9,531	2
CXH30-236		36"	5,597	7,391	10,172	2
CXH30-242		42"	6,123	8,017	11,164	3
CXH30-248		48"	6,469	8,464	11,905	3
CXH30-254		54"	7,418	9,810	13,707	4
CXH30-342	900	42"	6,854	8,921	11,897	3
CXH30-348		48"	7,200	9,368	12,637	3
CXH30-354		54"	8,151	10,712	14,438	4
CXH30-360		60"	8,795	11,575	15,623	4
CXH30-448	1200	48"	7,890	10,121	13,327	3
CXH30-454		54"	8,838	11,468	15,128	4
CXH30-460		60"	9,483	12,330	16,307	4
CXH30-466		66"	9,950	12,974	17,317	4

• FOR OVERLAY MODELS, SPECIFY INTERIOR COLOR.

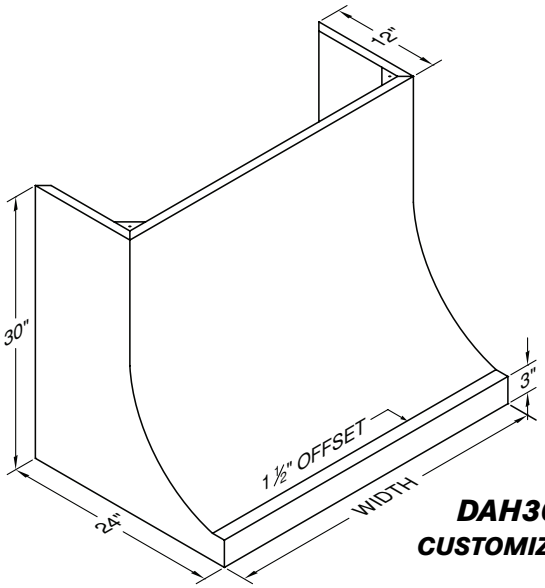

DAH30
CUSTOMIZABLE!

DAH30

Model No.	CFM	Width	Painted	Stainless	Overlay •	# Lts
DAH30-130	300	30"	4,659	6,292	8,841	2
DAH30-136		36"	4,907	6,637	9,483	2
DAH30-142		42"	5,435	7,263	10,475	3
DAH30-148		48"	5,782	7,708	11,215	3
DAH30-230	600	30"	5,348	7,045	9,531	2
DAH30-236		36"	5,597	7,391	10,172	2
DAH30-242		42"	6,123	8,017	11,164	3
DAH30-248		48"	6,469	8,464	11,905	3
DAH30-254		54"	7,418	9,810	13,707	4
DAH30-342	900	42"	6,854	8,921	11,897	3
DAH30-348		48"	7,200	9,368	12,637	3
DAH30-354		54"	8,151	10,712	14,438	4
DAH30-360		60"	8,795	11,575	15,623	4
DAH30-448	1200	48"	7,890	10,121	13,327	3
DAH30-454		54"	8,838	11,468	15,128	4
DAH30-460		60"	9,483	12,330	16,307	4
DAH30-466		66"	9,950	12,974	17,317	4

• FOR OVERLAY MODELS, SPECIFY INTERIOR COLOR.

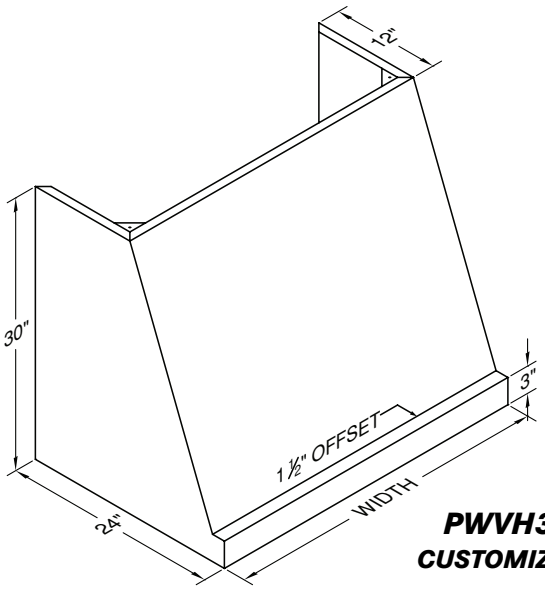

PWVH30
CUSTOMIZABLE!

PWVH30

Model No.	CFM	Width	Painted	Stainless	Overlay •	# Lts
PWVH30-130	300	30"	4,659	6,292	8,841	2
PWVH30-136		36"	4,907	6,637	9,483	2
PWVH30-142		42"	5,435	7,263	10,475	3
PWVH30-148		48"	5,782	7,708	11,215	3
PWVH30-230	600	30"	5,348	7,045	9,531	2
PWVH30-236		36"	5,597	7,391	10,172	2
PWVH30-242		42"	6,123	8,017	11,164	3
PWVH30-248		48"	6,469	8,464	11,905	3
PWVH30-254		54"	7,418	9,810	13,707	4
PWVH30-342	900	42"	6,854	8,921	11,897	3
PWVH30-348		48"	7,200	9,368	12,637	3
PWVH30-354		54"	8,151	10,712	14,438	4
PWVH30-360		60"	8,795	11,575	15,623	4
PWVH30-448	1200	48"	7,890	10,121	13,327	3
PWVH30-454		54"	8,838	11,468	15,128	4
PWVH30-460		60"	9,483	12,330	16,307	4
PWVH30-466		66"	9,950	12,974	17,317	4

• FOR OVERLAY MODELS, SPECIFY INTERIOR COLOR.

THE INFORMATION IN THIS DOCUMENT IS SUBJECT TO CHANGE AT ANY TIME WITHOUT NOTICE.

PROFESSIONAL/STANDARD WALL MOUNT

REC. MOUNTING HEIGHT FROM COOKING SURFACE: 30"

900 CFM OPTIONAL TRANSITION TO 10" ROUND: VP562
1200 CFM OPTIONAL TRANSITION TO 12" ROUND: VP563

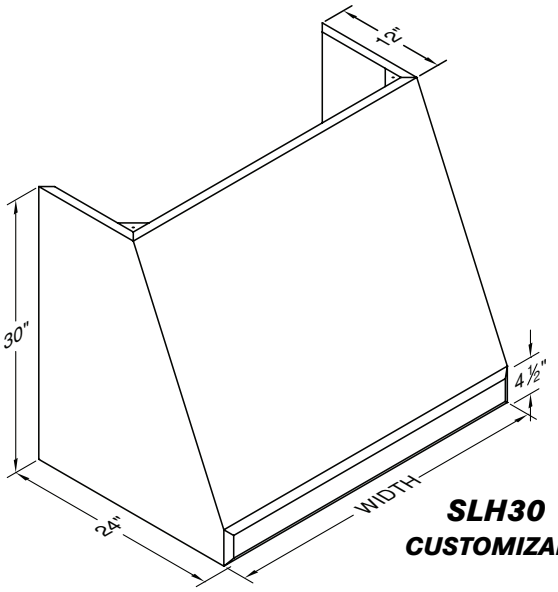

SLH30
CUSTOMIZABLE!

SLH30

Model No.	CFM	Width	Painted	Stainless	Overlay •	# Lts
SLH30-130	300	30"	4,659	6,292	8,841	2
SLH30-136		36"	4,907	6,637	9,483	2
SLH30-142		42"	5,435	7,263	10,475	3
SLH30-148		48"	5,782	7,708	11,215	3
SLH30-230	600	30"	5,348	7,045	9,531	2
SLH30-236		36"	5,597	7,391	10,172	2
SLH30-242		42"	6,123	8,017	11,164	3
SLH30-248		48"	6,469	8,464	11,905	3
SLH30-254		54"	7,418	9,810	13,707	4
SLH30-342	900	42"	6,854	8,921	11,897	3
SLH30-348		48"	7,200	9,368	12,637	3
SLH30-354		54"	8,151	10,712	14,438	4
SLH30-360		60"	8,795	11,575	15,623	4
SLH30-448	1200	48"	7,890	10,121	13,327	3
SLH30-454		54"	8,838	11,468	15,128	4
SLH30-460		60"	9,483	12,330	16,307	4
SLH30-466		66"	9,950	12,974	17,317	4

• FOR OVERLAY MODELS, SPECIFY INTERIOR COLOR.

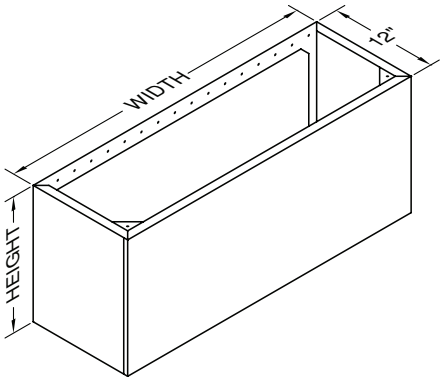

WDCRND

Model No.	Width	Height	Painted	Stainless	Overlay	Ceiling
WDCRND-30	30"	12"	969	1,143	1,408	9'
WDCRND-30/24		24"	1,275	1,605	2,153	10'
WDCRND-30/36		36"	1,559	2,088	2,878	11'
WDCRND-36	36"	12"	1,034	1,230	1,559	9'
WDCRND-36/24		24"	1,383	1,802	2,441	10'
WDCRND-36/36		36"	1,759	2,374	3,319	11'
WDCRND-42	42"	12"	1,101	1,340	1,692	9'
WDCRND-42/24		24"	1,518	2,000	2,726	10'
WDCRND-42/36		36"	1,934	2,659	3,759	11'
WDCRND-48	48"	12"	1,143	1,430	1,846	9'
WDCRND-48/24		24"	1,627	2,177	3,034	10'
WDCRND-48/36		36"	2,111	2,925	4,196	11'
WDCRND-54	54"	12"	1,208	1,518	2,000	9'
WDCRND-60	60"	12"	1,275	1,605	2,153	9'
WDCRND-66	66"	12"	1,340	1,716	2,285	9'
CUSTOM	WIDTH X HEIGHT X		1.00	1.50	2.00	
	PLUS			734		
FINISHED TOP	WIDTH X DEPTH X		1.00	1.50	2.00	
	PLUS			428		
SLOPED TOP •	ADD			734		

CEILING BASED ON REC. MAXIMUM MOUNTING HEIGHT FOR 30"T WALL MOUNT HOOD.
• SPECIFY FRONT TO BACK OR LEFT TO RIGHT DIMENSIONS.

30" TALL WALL MOUNT HOOD VARIATIONS

WIDTHS OVER 66"

	PAINTED	STAINLESS	OVERLAY
FOR EACH 6" INCREMENT	332	477	592
PLUS		428	

SPECIAL WIDTH (LESS THAN 66")
USE NEXT LARGEST SIZE ON PRICE LIST,
PLUS 428

HEIGHT OVER 30"

	PAINTED	STAINLESS	OVERLAY
WIDTH X EXTRA HEIGHT X	2	3	4
PLUS		734	

SPECIAL HEIGHT (LESS THAN STANDARD HOOD HEIGHT)
USE STANDARD HOOD PRICE,
PLUS 734

DEPTH OVER 24" (EXCLUDING 27" WHERE APPLICABLE)

	PAINTED	STAINLESS	OVERLAY
WIDTH X EXTRA DEPTH X	2	3	4
PLUS		734	

SPECIAL DEPTH (LESS THAN 24")
USE STANDARD HOOD PRICE,
PLUS 734

SLOPE, LIP, OFFSET, OR TOP VARIATION
PER VARIATION, ADD 734

CONCAVE, CONVEX, SLOPED END (NON-OVERLAY SL MODELS)
TOP WIDTH REDUCED BY 6" EACH. PER END, ADD 734

CLIPPED CORNER (NON-NP/SL/XR MODELS)
PER CORNER, ADD 734

SPECIAL BLOWER LOCATION
LEFT TO RIGHT, SPECIFY COLLAR CENTERLINE
ADD 428

SPECIAL DECK (9" MINIMUM, 12" STANDARD)
ADD 428

STAINLESS STEEL INTERIOR ON OVERLAY HOOD
SUBTRACT PAINTED HOOD PRICE FROM STAINLESS HOOD PRICE

ADDITIONAL BLOWERS & LIGHTS
SEE PAGE 50 FOR BLOWER OPTIONS

REMOTE BLOWER OPTIONS
SEE PAGES 50-51 FOR REMOTE BLOWER OPTIONS

CUSTOM COLOR (SEE CUSTOM COLOR CHART)
ADD 1340

TRIM OPTIONS
SEE PAGES 56-57 FOR FINISH AND TRIM OPTIONS

WARMING LAMPS AND SHELVES
SEE PAGES 53 FOR WARMING LAMP AND SHELF OPTIONS

THE INFORMATION IN THIS DOCUMENT IS SUBJECT TO CHANGE AT ANY TIME WITHOUT NOTICE.

PROFESSIONAL/STANDARD WALL MOUNT

REC. MOUNTING HEIGHT FROM COOKING SURFACE: 33"

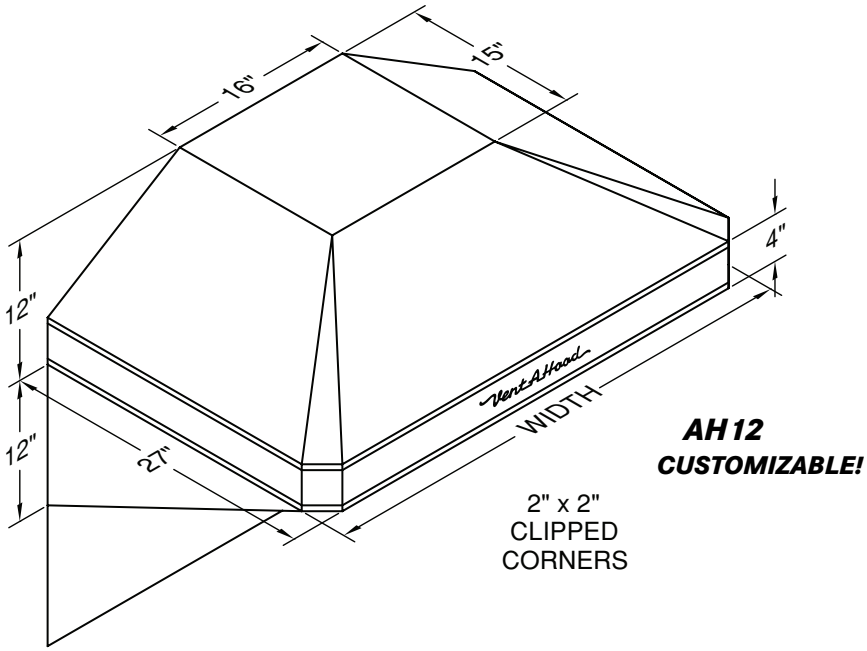

AH12
CUSTOMIZABLE!

AH12

Model No.	CFM	Width	Painted	# Lts
AH12-130	300	30"	3,273	2
AH12-136		36"	3,321	2
AH12-142		42"	3,678	3
AH12-148		48"	3,824	3
AH12-236	600	36"	4,010	2
AH12-242		42"	4,367	3
AH12-248		48"	4,513	3

HOOD INCLUDES TWO SIDE WING PANELS AND SPLASH PANEL 30" TALL X WIDTH OF HOOD.

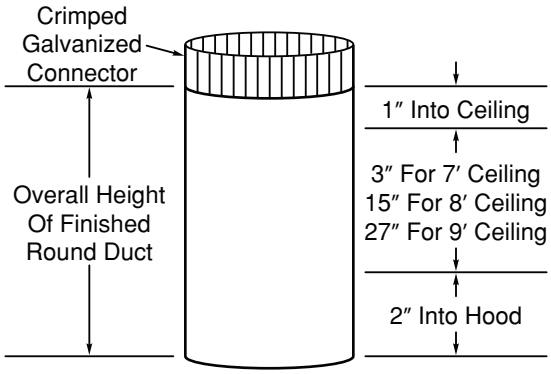

FINISHED DUCTS FOR AH12

Model No.	Width	Height	Painted	Ceiling
ARDC-6/6	6"	6"	135	7'
ARDC-6/18		18"	182	8'
ARDC-6/30		30"	224	9'
ARDC-8/6	8"	6"	135	7'
ARDC-8/18		18"	224	8'
ARDC-8/30		30"	270	9'
CUSTOM	WIDTH X HEIGHT X		1.00	
	PLUS		734	

NOTE: FINISHED ROUND DUCT EXTENDS 2" INTO TOP OF HOOD AND 1" INTO CEILING.
CEILING BASED ON REC. MAXIMUM HOOD MOUNTING HEIGHT.

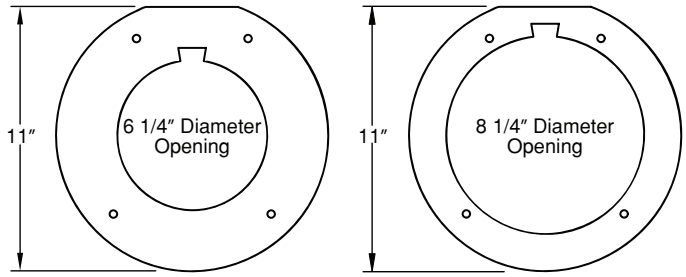

FINISHED DUCT ACCESSORIES

MODEL NO.	WIDTH	PAINTED
ARC6	6"	42
ARC8	8"	42

AH12 RETRO-STYLE WALL MOUNT HOOD VARIATIONS

SPECIAL WIDTH (LESS THAN 48")	CUSTOM COLOR (SEE CUSTOM COLOR CHART)
USE NEXT LARGEST SIZE ON PRICE LIST,	ADD 1340
PLUS 734	

THE INFORMATION IN THIS DOCUMENT IS SUBJECT TO CHANGE AT ANY TIME WITHOUT NOTICE.

PROFESSIONAL/STANDARD WALL MOUNT

REC. MOUNTING HEIGHT FROM COOKING SURFACE: 30"

900 CFM OPTIONAL TRANSITION TO 10" ROUND: VP562
1200 CFM OPTIONAL TRANSITION TO 12" ROUND: VP563

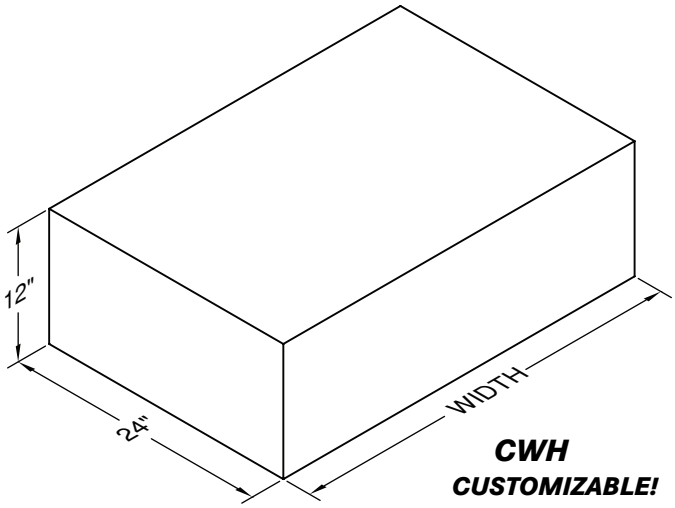

CWH
CUSTOMIZABLE!

CWH

Model No.	CFM	Width	Painted	Stainless	Overlay •	# Lts
CWH-130	300	30"	3,065	4,237	5,788	2
CWH-136		36"	3,111	4,308	6,019	2
CWH-142		42"	3,498	4,670	6,617	3
CWH-148		48"	3,659	4,858	6,941	3
CWH-230	600	30"	3,752	4,993	6,475	2
CWH-236		36"	3,801	5,063	6,707	2
CWH-242		42"	4,186	5,424	7,306	3
CWH-248		48"	4,349	5,609	7,629	3
CWH-254		54"	5,178	6,743	8,832	4
CWH-342	900	42"	4,918	6,328	8,037	3
CWH-348		48"	5,080	6,514	8,363	3
CWH-354		54"	5,909	7,648	9,563	4
CWH-360		60"	6,305	8,182	10,284	4
CWH-448	1200	48"	5,768	7,267	9,051	3
CWH-454		54"	6,598	8,401	10,254	4
CWH-460		60"	6,994	8,936	10,975	4
CWH-466		66"	7,320	9,331	11,534	4

• FOR OVERLAY MODELS, SPECIFY INTERIOR COLOR.

CWH WALL MOUNT HOOD VARIATIONS

WIDTHS OVER 66"

	PAINTED	STAINLESS	OVERLAY
FOR EACH 6" INCREMENT	332	477	592
PLUS		428	

SPECIAL WIDTH (LESS THAN 66")
USE NEXT LARGEST SIZE ON PRICE LIST,
PLUS 428

SPECIAL HEIGHT (BETWEEN 9" & 12")
USE STANDARD PRICE,
PLUS 734

HEIGHT OVER 12"

	PAINTED	STAINLESS	OVERLAY
WIDTH X EXTRA HEIGHT X	2.00	3.00	4.00
PLUS		734	

DEPTH LESS THAN 24"
ADD 734

DEPTH OVER 24"

	PAINTED	STAINLESS	OVERLAY
WIDTH X EXTRA DEPTH X	2.00	3.00	4.00
PLUS		734	

LIP AND OFFSET
1, 2 OR 3 SIDES, ADD 734

ROUNDED CORNER
NO OFFSETS OR LIP, MINIMUM 4 INCH RADIUS
PER CORNER, ADD 829

SPECIAL BLOWER LOCATION
LEFT TO RIGHT, SPECIFY COLLAR CENTERLINE
ADD 428

SPECIAL DECK (9" MINIMUM)
ADD 428

STAINLESS STEEL INTERIOR ON OVERLAY HOOD
SUBTRACT PAINTED HOOD PRICE FROM STAINLESS HOOD PRICE

ADDITIONAL BLOWERS & LIGHTS
SEE PAGE 50 FOR BLOWER OPTIONS

REMOTE BLOWER OPTIONS
SEE PAGES 50-51 FOR REMOTE BLOWER OPTIONS

CUSTOM COLOR (SEE CUSTOM COLOR CHART)
ADD 1340

TRIM OPTIONS
SEE PAGES 56-57 FOR FINISH AND TRIM OPTIONS

WARMING LAMPS AND SHELVES
SEE PAGES 53 FOR WARMING LAMP AND SHELF OPTIONS

THE INFORMATION IN THIS DOCUMENT IS SUBJECT TO CHANGE AT ANY TIME WITHOUT NOTICE.

DESIGNER SERIES WALL MOUNT

REC. MOUNTING HEIGHT FROM COOKING SURFACE: 30"

900 CFM & 1200 CFM MODELS: TRANSITION INCLUDED IN HOOD

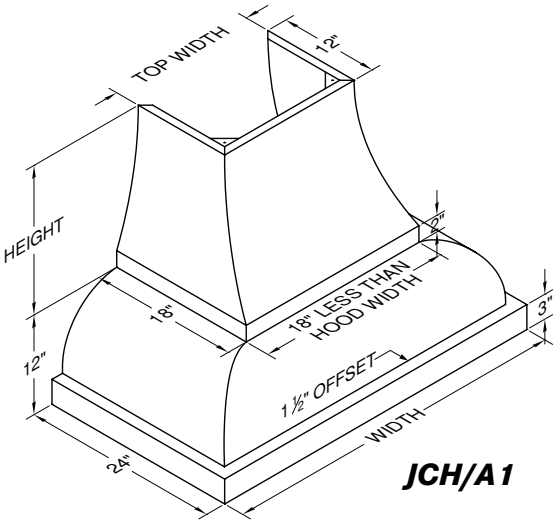

JCH/A1

SHOWN WITH MATCHING DUCT COVER (SOLD SEPARATELY)

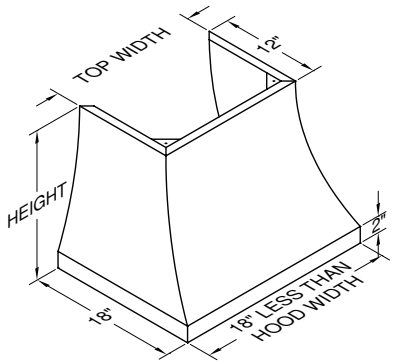

JCH/A1

Model No.	CFM	Width	Top W.	Painted	Stainless	Overlay •	# Lts
JCH136/A1	300	36"	18"	4,162	5,120	6,722	2
JCH142/A1		42"	24"	4,491	5,403	7,246	3
JCH148/A1		48"	30"	4,656	5,615	7,509	3
JCH236/A1	600	36"	18"	4,825	5,848	7,390	2
JCH242/A1		42"	24"	5,156	6,131	7,913	3
JCH248/A1		48"	30"	5,322	6,345	8,177	3
JCH348/A1	900*	48"	30"	6,031	7,219	8,887	3
JCH354/A1		54"	36"	7,145	8,607	10,501	4
JCH360/A1		60"	42"	7,409	8,966	11,051	4
JCH454/A1	1200+	54"	36"	7,811	9,335	11,169	4
JCH460/A1		60"	42"	8,075	9,700	11,718	4
JCH466/A1		66"	48"	8,391	10,119	12,297	4

• FOR OVERLAY HOODS, SPECIFY INTERIOR COLOR.
*VP562 TRANSITION TO 10" ROUND INCLUDED.
+VP563 TRANSITION TO 12" ROUND INCLUDED.

DUCT COVERS FOR JCH/A1

Model No.	Width	Top W.	Height	Painted	Stainless	Overlay •	Ceiling
CDC-18/12/18	18"	12"	18"	1,590	1,750	1,973	8'
CDC-18/12/30		12"	30"	2,309	2,577	2,981	9'
CDC-18/12/42		12"	42"	2,487	2,867	3,451	10'
CDC-24/12/18	24"	18"	18"	1,683	1,882	2,195	8'
CDC-24/12/30		12"	30"	2,465	2,826	3,363	9'
CDC-24/12/42		12"	42"	2,711	3,203	3,988	10'
CDC-30/12/18	30"	24"	18"	1,770	2,017	2,419	8'
CDC-30/12/30		12"	30"	2,622	3,068	3,742	9'
CDC-30/12/42		12"	42"	2,934	3,560	4,527	10'
CDC-36/12/18	36"	30"	18"	1,860	2,174	2,645	8'
CDC-36/12/30		18"	30"	2,779	3,316	4,125	9'
CDC-36/12/42		18"	42"	3,161	3,897	5,063	10'
CDC-42/12/18	42"	36"	18"	1,950	2,309	2,846	8'
CDC-42/12/30		24"	30"	2,934	3,560	4,527	9'
CDC-42/12/42		18"	42"	3,383	4,257	5,577	10'
CDC-48/12/18	48"	42"	18"	2,040	2,444	3,068	8'
CDC-48/12/30		30"	30"	3,093	3,810	4,904	9'
CDC-48/12/42		24"	42"	3,606	4,594	6,115	10'

• TRIM REQUIRED ON MODELS EXCEEDING 35" WIDTH AND 30" HEIGHT.
CEILING BASED ON REC. MAXIMUM HOOD MOUNTING HEIGHT.

THE INFORMATION IN THIS DOCUMENT IS SUBJECT TO CHANGE AT ANY TIME WITHOUT NOTICE.

DESIGNER SERIES WALL MOUNT

REC. MOUNTING HEIGHT FROM COOKING SURFACE: 30"

900 CFM & 1200 CFM MODELS: TRANSITION INCLUDED IN HOOD

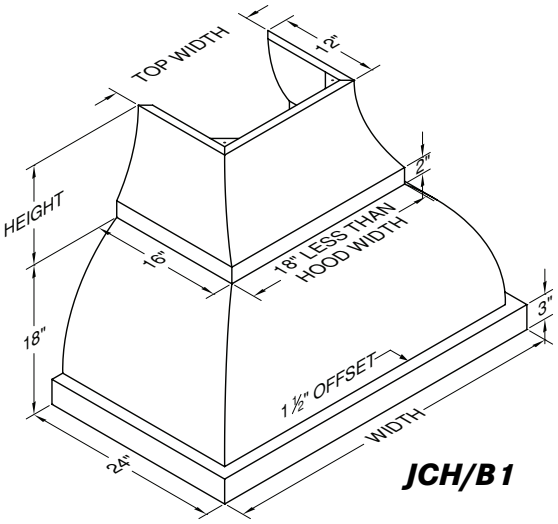

JCH/B 1

SHOWN WITH MATCHING DUCT COVER (SOLD SEPARATELY)

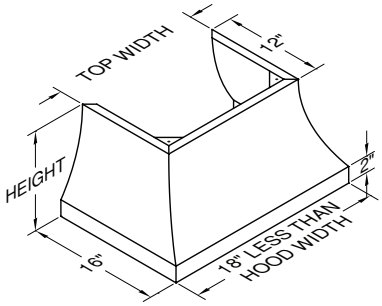

JCH/B 1

Model No.	CFM	Width	Top W.	Painted	Stainless	Overlay •	# Lts
JCH136/B1	300	36"	18"	4,162	5,120	6,722	2
JCH142/B1		42"	24"	4,491	5,403	7,246	3
JCH148/B1		48"	30"	4,656	5,615	7,509	3
JCH236/B1	600	36"	18"	4,825	5,848	7,390	2
JCH242/B1		42"	24"	5,156	6,131	7,913	3
JCH248/B1		48"	30"	5,322	6,345	8,177	3
JCH348/B1	900*	48"	30"	6,031	7,219	8,887	3
JCH354/B1		54"	36"	7,145	8,607	10,501	4
JCH360/B1		60"	42"	7,409	8,966	11,051	4
JCH454/B1	1200+	54"	36"	7,811	9,335	11,169	4
JCH460/B1		60"	42"	8,075	9,700	11,718	4
JCH466/B1		66"	48"	8,391	10,119	12,297	4

• FOR OVERLAY HOODS, SPECIFY INTERIOR COLOR.
*VP562 TRANSITION TO 10" ROUND INCLUDED.
+VP563 TRANSITION TO 12" ROUND INCLUDED.

DUCT COVERS FOR JCH/B 1

Model No.	Width	Top W.	Height	Painted	Stainless	Overlay •	Ceiling
CDC-18/12/12	18"	12"	12"	1,590	1,750	1,973	8'
CDC-18/12/24		12"	24"	2,309	2,577	2,981	9'
CDC-18/12/36		12"	36"	2,487	2,867	3,451	10'
CDC-24/12/12	24"	18"	12"	1,683	1,882	2,195	8'
CDC-24/12/24		12"	24"	2,465	2,826	3,363	9'
CDC-24/12/36		12"	36"	2,711	3,203	3,988	10'
CDC-30/12/12	30"	24"	12"	1,770	2,017	2,419	8'
CDC-30/12/24		12"	24"	2,622	3,068	3,742	9'
CDC-30/12/36		12"	36"	2,934	3,560	4,527	10'
CDC-36/12/12	36"	30"	12"	1,860	2,174	2,645	8'
CDC-36/12/24		18"	24"	2,779	3,316	4,125	9'
CDC-36/12/36		18"	36"	3,161	3,897	5,063	10'
CDC-42/12/12	42"	36"	12"	1,950	2,309	2,846	8'
CDC-42/12/24		24"	24"	2,934	3,560	4,527	9'
CDC-42/12/36		18"	36"	3,383	4,257	5,577	10'
CDC-48/12/12	48"	42"	12"	2,040	2,444	3,068	8'
CDC-48/12/24		30"	24"	3,093	3,810	4,904	9'
CDC-48/12/36		24"	36"	3,606	4,594	6,115	10'

• TRIM REQUIRED ON MODELS EXCEEDING 35" WIDTH AND 30" HEIGHT.
CEILING BASED ON REC. MAXIMUM HOOD MOUNTING HEIGHT.

THE INFORMATION IN THIS DOCUMENT IS SUBJECT TO CHANGE AT ANY TIME WITHOUT NOTICE.

DESIGNER SERIES WALL MOUNT

REC. MOUNTING HEIGHT FROM COOKING SURFACE: 30"

900 CFM OPTIONAL TRANSITION TO 10" ROUND: VP562
1200 CFM OPTIONAL TRANSITION TO 12" ROUND: VP563

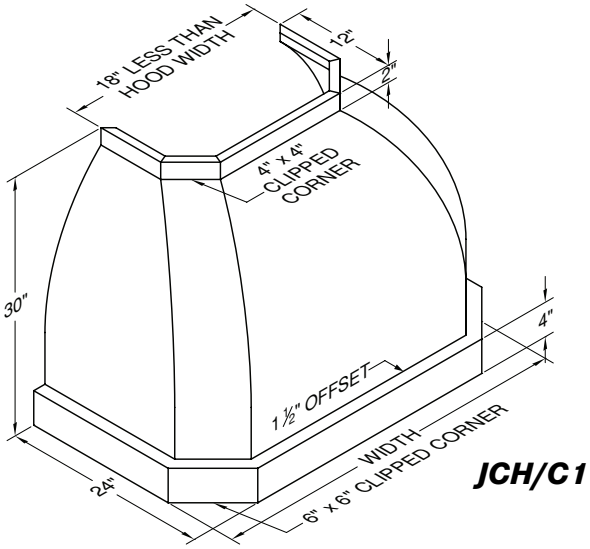

JCH/C1

Model No.	CFM	Width	Painted	Stainless	Overlay •	# Lts
JCH136/C1	300	36"	5,906	7,495	10,070	2
JCH142/C1		42"	6,396	8,056	10,989	3
JCH148/C1		48"	6,711	8,467	11,662	3
JCH236/C1	600	36"	6,572	8,224	10,737	2
JCH242/C1		42"	7,065	8,784	11,656	3
JCH248/C1		48"	7,374	9,195	12,327	3
JCH348/C1	900	48"	8,082	10,073	13,036	3
JCH354/C1		54"	9,054	11,383	14,772	4
JCH360/C1		60"	9,490	12,032	15,705	4
JCH454/C1	1200	54"	9,722	12,113	15,438	4
JCH460/C1		60"	10,156	12,765	16,371	4
JCH466/C1		66"	10,566	13,338	17,282	4

• FOR OVERLAY HOODS, SPECIFY INTERIOR COLOR.

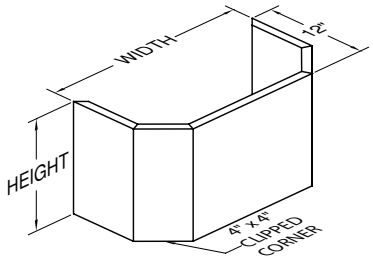

DUCT COVERS FOR JCH/C1

Model No.	Width	Height	Painted	Stainless	Overlay	Ceiling
WDCC4-18/12	18"	12"	1,523	1,636	1,793	9'
WDCC4-18/24		24"	1,702	1,927	2,240	10'
WDCC4-24/12	24"	12"	1,590	1,725	1,950	9'
WDCC4-24/24		24"	1,837	2,108	2,554	10'
WDCC4-30/12	30"	12"	1,636	1,818	2,108	9'
WDCC4-30/24		24"	1,950	2,309	2,867	10'
WDCC4-36/12	36"	12"	1,702	1,927	2,240	9'
WDCC4-36/24		24"	2,083	2,510	3,161	10'
WDCC4-42/12	42"	12"	1,770	2,017	2,397	9'
WDCC4-42/24		24"	2,219	2,711	3,474	10'
WDCC4-48/12	48"	12"	1,837	2,108	2,554	9'
WDCC4-48/24		24"	2,332	2,912	3,787	10'

CEILING BASED ON REC. MAXIMUM HOOD MOUNTING HEIGHT.

THE INFORMATION IN THIS DOCUMENT IS SUBJECT TO CHANGE AT ANY TIME WITHOUT NOTICE.

DESIGNER SERIES WALL MOUNT

REC. MOUNTING HEIGHT FROM COOKING SURFACE: 30"

900 CFM JCH/C2 OPTIONAL TRANSITION TO 10" ROUND: VP562
1200 CFM JCH/C2 OPTIONAL TRANSITION TO 12" ROUND: VP563
900/1200 CFM JDH/C1 & JDH/C2 MODELS: TRANSITION INCLUDED

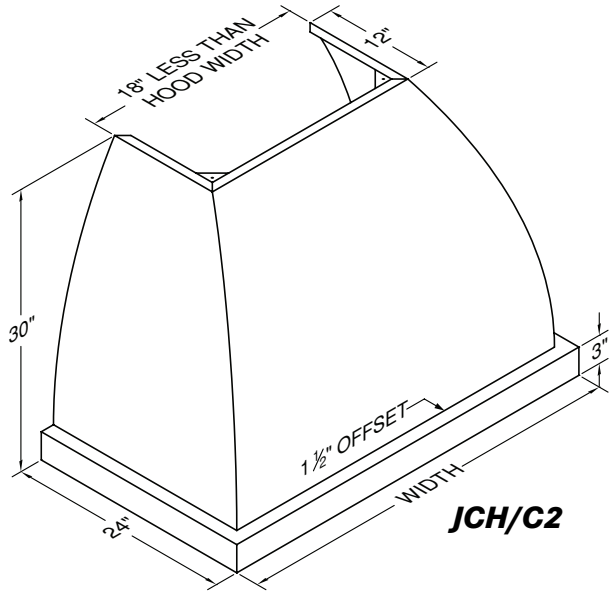

JCH/C2

JCH/C2

Model No.	CFM	Width	Painted	Stainless	Overlay •	# Lts
JCH136/C2	300	36"	5,671	7,295	9,882	2
JCH142/C2		42"	6,143	7,845	10,768	3
JCH148/C2		48"	6,455	8,228	11,442	3
JCH236/C2	600	36"	6,337	8,023	10,551	2
JCH242/C2		42"	6,812	8,573	11,437	3
JCH248/C2		48"	7,120	8,959	12,108	3
JCH348/C2	900	48"	7,831	9,835	12,816	3
JCH354/C2		54"	9,012	11,173	14,766	4
JCH360/C2		60"	9,447	12,037	15,727	4
JCH454/C2	1200	54"	9,680	11,901	15,433	4
JCH460/C2		60"	10,113	12,768	16,394	4
JCH466/C2		66"	10,621	13,451	17,380	4

• FOR OVERLAY HOODS, SPECIFY INTERIOR COLOR.

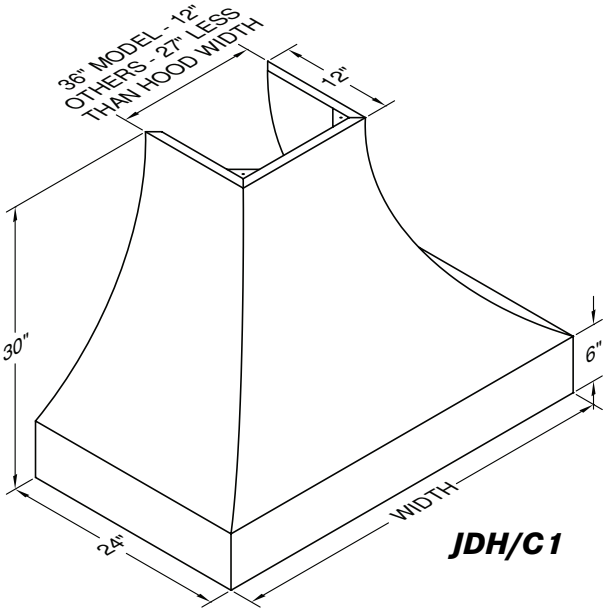

JDH/C1

JDH/C1

Model No.	CFM	Width	Painted	Stainless	Overlay •	# Lts
JDH136/C1	300	36"	5,671	7,295	9,882	2
JDH142/C1		42"	6,143	7,845	10,768	3
JDH148/C1		48"	6,455	8,228	11,442	3
JDH236/C1	600	36"	6,337	8,023	10,551	2
JDH242/C1		42"	6,812	8,573	11,437	3
JDH248/C1		48"	7,120	8,959	12,108	3
JDH348/C1	900*	48"	7,831	9,835	12,816	3
JDH354/C1		54"	9,012	11,173	14,766	4
JDH360/C1		60"	9,447	12,037	15,727	4
JDH454/C1	1200+	54"	9,680	11,901	15,433	4
JDH460/C1		60"	10,113	12,768	16,394	4
JDH466/C1		66"	10,621	13,451	17,380	4

• FOR OVERLAY HOODS, SPECIFY INTERIOR COLOR.
*VP562 TRANSITION TO 10" ROUND INCLUDED.
+VP563 TRANSITION TO 12" ROUND INCLUDED.

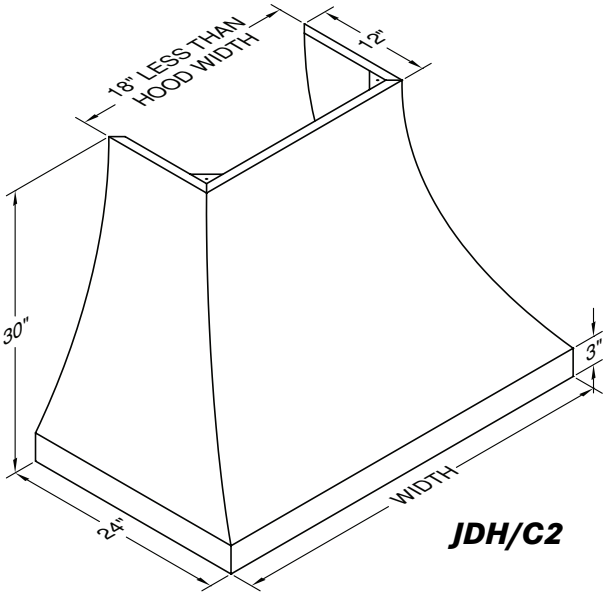

JDH/C2

JDH/C2

Model No.	CFM	Width	Painted	Stainless	Overlay •	# Lts
JDH136/C2	300	36"	5,671	7,295	9,882	2
JDH142/C2		42"	6,143	7,845	10,768	3
JDH148/C2		48"	6,455	8,228	11,442	3
JDH236/C2	600	36"	6,337	8,023	10,551	2
JDH242/C2		42"	6,812	8,573	11,437	3
JDH248/C2		48"	7,120	8,959	12,108	3
JDH348/C2	900*	48"	7,831	9,835	12,816	3
JDH354/C2		54"	9,012	11,173	14,766	4
JDH360/C2		60"	9,447	12,037	15,727	4
JDH454/C2	1200+	54"	9,680	11,901	15,433	4
JDH460/C2		60"	10,113	12,768	16,394	4
JDH466/C2		66"	10,621	13,451	17,380	4

• FOR OVERLAY HOODS, SPECIFY INTERIOR COLOR.
*VP562 TRANSITION TO 10" ROUND INCLUDED.
+VP563 TRANSITION TO 12" ROUND INCLUDED.

THE INFORMATION IN THIS DOCUMENT IS SUBJECT TO CHANGE AT ANY TIME WITHOUT NOTICE.

DESIGNER SERIES WALL MOUNT

REC. MOUNTING HEIGHT FROM COOKING SURFACE: 30"

900/1200 CFM JDH/C3: TRANSITION INCLUDED
900 CFM JPH/C1 & JPH/C2 OPTIONAL TRANSITION TO 10" ROUND: VP562
1200 CFM JPH/C1 & JPH/C2 OPTIONAL TRANSITION TO 12" ROUND: VP563

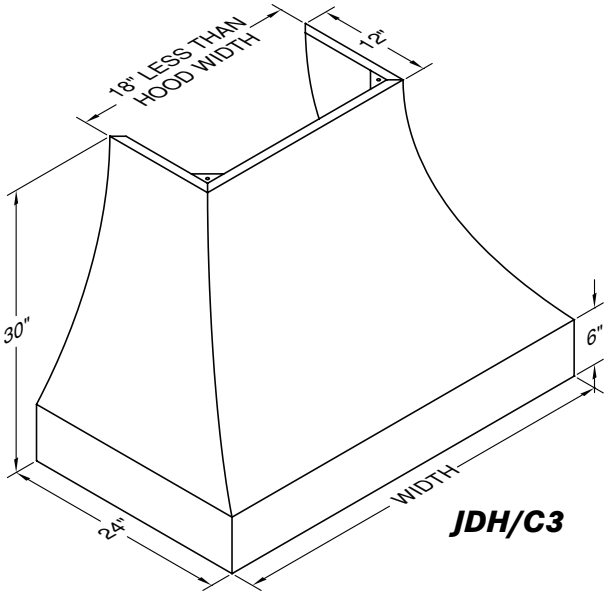

JDH/C3

JDH/C3

Model No.	CFM	Width	Painted	Stainless	Overlay •	# Lts
JDH136/C3	300	36"	5,671	7,295	9,882	2
JDH142/C3		42"	6,143	7,845	10,768	3
JDH148/C3		48"	6,455	8,228	11,442	3
JDH236/C3	600	36"	6,337	8,023	10,551	2
JDH242/C3		42"	6,812	8,573	11,437	3
JDH248/C3		48"	7,120	8,959	12,108	3
JDH348/C3	900*	48"	7,831	9,835	12,816	3
JDH354/C3		54"	9,012	11,173	14,766	4
JDH360/C3		60"	9,447	12,037	15,727	4
JDH454/C3	1200+	54"	9,680	11,901	15,433	4
JDH460/C3		60"	10,113	12,768	16,394	4
JDH466/C3		66"	10,621	13,451	17,380	4

• FOR OVERLAY HOODS, SPECIFY INTERIOR COLOR.
*VP562 TRANSITION TO 10" ROUND INCLUDED.
+VP563 TRANSITION TO 12" ROUND INCLUDED.

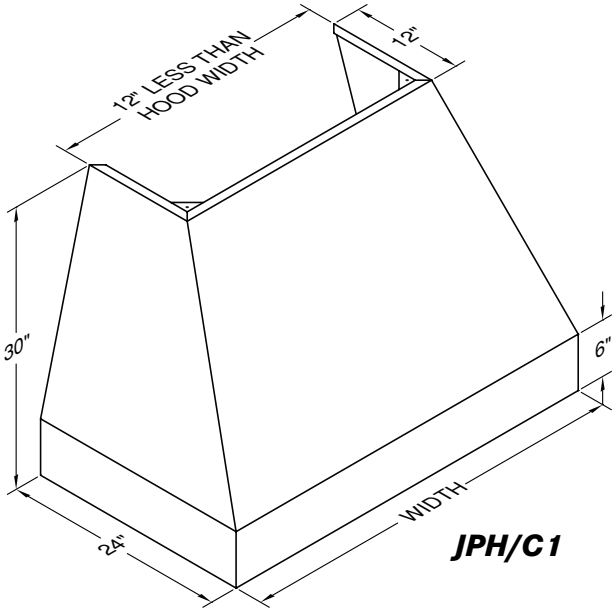

JPH/C1

JPH/C1

Model No.	CFM	Width	Painted	Stainless	Overlay •	# Lts
JPH136/C1	300	36"	5,671	7,295	9,882	2
JPH142/C1		42"	6,143	7,845	10,768	3
JPH148/C1		48"	6,455	8,228	11,442	3
JPH236/C1	600	36"	6,337	8,023	10,551	2
JPH242/C1		42"	6,812	8,573	11,437	3
JPH248/C1		48"	7,120	8,959	12,108	3
JPH348/C1	900	48"	7,831	9,835	12,816	3
JPH354/C1		54"	9,012	11,173	14,766	4
JPH360/C1		60"	9,447	12,037	15,727	4
JPH454/C1	1200	54"	9,680	11,901	15,433	4
JPH460/C1		60"	10,113	12,768	16,394	4
JPH466/C1		66"	10,621	13,451	17,380	4

• FOR OVERLAY HOODS, SPECIFY INTERIOR COLOR.

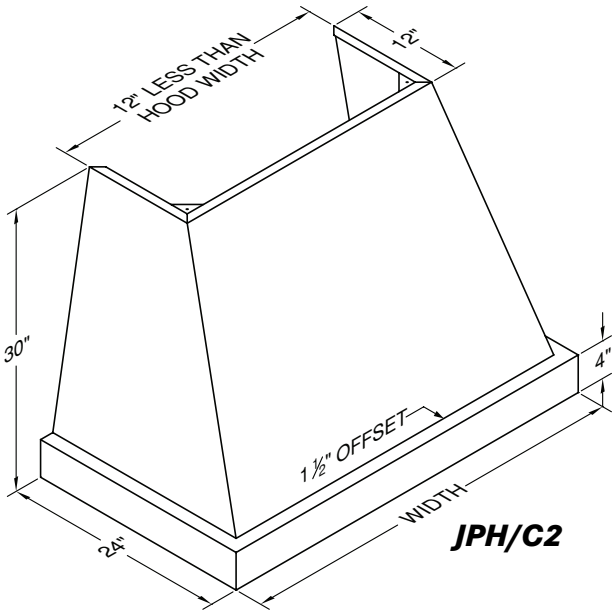

JPH/C2

JPH/C2

Model No.	CFM	Width	Painted	Stainless	Overlay •	# Lts
JPH136/C2	300	36"	5,671	7,295	9,882	2
JPH142/C2		42"	6,143	7,845	10,768	3
JPH148/C2		48"	6,455	8,228	11,442	3
JPH236/C2	600	36"	6,337	8,023	10,551	2
JPH242/C2		42"	6,812	8,573	11,437	3
JPH248/C2		48"	7,120	8,959	12,108	3
JPH348/C2	900	48"	7,831	9,835	12,816	3
JPH354/C2		54"	9,012	11,173	14,766	4
JPH360/C2		60"	9,447	12,037	15,727	4
JPH454/C2	1200	54"	9,680	11,901	15,433	4
JPH460/C2		60"	10,113	12,768	16,394	4
JPH466/C2		66"	10,621	13,451	17,380	4

• FOR OVERLAY HOODS, SPECIFY INTERIOR COLOR.

THE INFORMATION IN THIS DOCUMENT IS SUBJECT TO CHANGE AT ANY TIME WITHOUT NOTICE.

DESIGNER SERIES WALL MOUNT

REC. MOUNTING HEIGHT FROM COOKING SURFACE: 30"

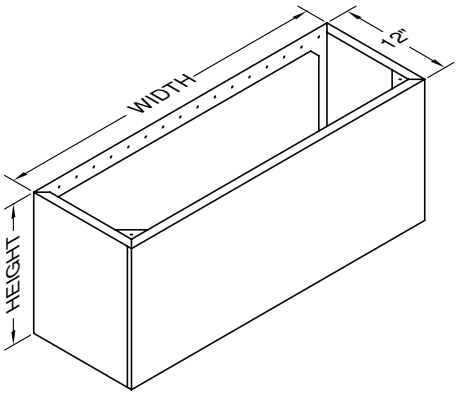

WDCRND FOR DESIGNER SERIES HOODS

Model No.	Width	Height	Painted	Stainless	Overlay	Ceiling
WDCRND-12/12	12"	12"	792	857	969	9'
WDCRND-12/24		24"	905	1,054	1,256	10'
WDCRND-15/12	15"	12"	837	924	1,054	9'
WDCRND-15/24		24"	989	1,164	1,452	10'
WDCRND-18/12	18"	12"	879	989	1,143	9'
WDCRND-18/24		24"	1,054	1,275	1,585	10'
WDCRND-21/12	21"	12"	905	1,034	1,208	9'
WDCRND-21/24		24"	1,122	1,363	1,737	10'
WDCRND-24/12	24"	12"	945	1,079	1,298	9'
WDCRND-24/24		24"	1,188	1,473	1,889	10'
WDCRND-27/12	27"	12"	969	1,122	1,363	9'
WDCRND-27/24		24"	1,256	1,559	2,045	10'
WDCRND-30/12	30"	12"	969	1,143	1,408	9'
WDCRND-30/24		24"	1,275	1,605	2,153	10'
WDCRND-33/12	33"	12"	1,034	1,230	1,518	9'
WDCRND-33/24		24"	1,363	1,759	2,350	10'
WDCRND-36/12	36"	12"	1,034	1,230	1,559	9'
WDCRND-36/24		24"	1,383	1,802	2,441	10'
WDCRND-39/12	39"	12"	1,101	1,318	1,669	9'
WDCRND-39/24		24"	1,494	1,934	2,639	10'
WDCRND-42/12	42"	12"	1,101	1,340	1,692	9'
WDCRND-42/24		24"	1,518	2,000	2,726	10'
WDCRND-48/12	48"	12"	1,143	1,430	1,846	9'
WDCRND-48/24		24"	1,627	2,177	3,034	10'
WDCRND-54/12	54"	12"	1,208	1,518	2,000	9'
WDCRND-54/24		24"	1,802	2,419	3,386	10'
CUSTOM	WIDTH X HEIGHT X		1.00	1.50	2.00	
	PLUS		734			
FINISHED TOP	WIDTH X DEPTH X		1.00	1.50	2.00	
	PLUS		428			
SLOPED TOP•	ADD		734			

CEILING BASED ON REC. MAXIMUM MOUNTING HEIGHT FOR 30"T DESIGNER WALL MOUNT HOOD.
•SPECIFY FRONT TO BACK OR LEFT TO RIGHT DIMENSIONS.

THE INFORMATION IN THIS DOCUMENT IS SUBJECT TO CHANGE AT ANY TIME WITHOUT NOTICE.

C2/AS Model

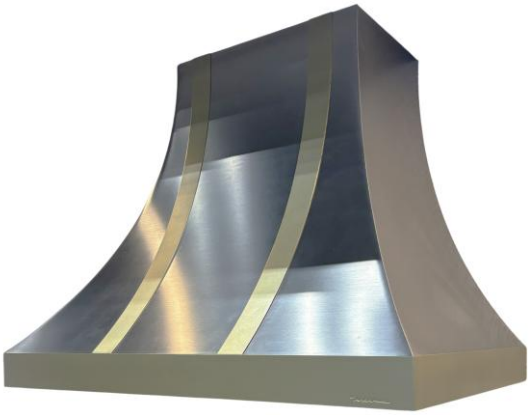

AS-SB Model

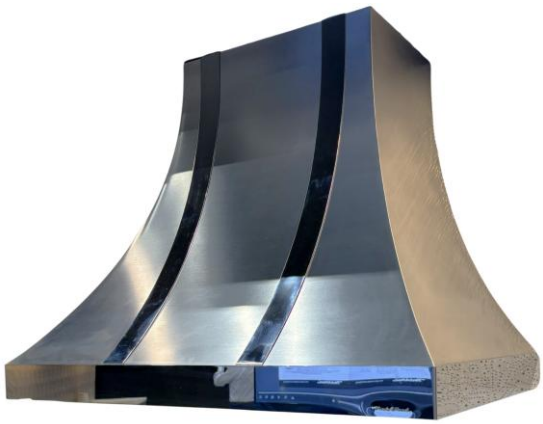

AS-MSS Model

"AS SHOWN" Designer Wall Mount Hoods

Model No.	*CFM*	*Width*	*Price*
JDH130/C2AS	300	30"	10,349
JDH136/C2AS		36"	9,199
JDH136/C2AS-9		36"	9,199
JDH136/C2AS-10		36"	9,199
JDH142/C2AS		42"	10,119
JDH148/C2AS		48"	10,625
JDH230/C2AS	600	30"	10,924
JDH236/C2AS		36"	10,119
JDH236/C2AS-9		36"	10,119
JDH236/C2AS-10		36"	10,119
JDH242/C2AS		42"	10,751
JDH242/C2AS-9		42"	10,751
JDH242/C2AS-10		42"	10,751
JDH248/C2AS		48"	11,384
JDH248/C2AS-9		48"	11,384
JDH248/C2AS-10		48"	11,384
JDH348/C2AS	900	48"	12,269
JDH348/C2AS-9		48"	12,269
JDH348/C2AS-10		48"	12,269
JDH354/C2AS		54"	13,408
JDH360/C2AS		60"	14,604
JDH454/C2AS	1200	54"	14,293
JDH460/C2AS		60"	14,949
JDH466/C2AS		66"	15,811

"AS SHOWN" Designer Wall Mount Hoods
No Pot Rail

Model No.	*CFM*	*Width*	*Price*
JDH136/C2SS/AS-MSS	300	36"	8,999
JDH136/C2SS/AS-SB		36"	9,499
JDH236/C2SS/AS-MSS	600	36"	9,699
JDH236/C2SS/AS-SB		36"	9,999
JDH248/C2SS/AS-MSS		48"	17,799
JDH248/C2SS/AS-SB		48"	11,299
JDH348/C2SS/AS-MSS	900	48"	11,499
JDH348/C2SS/AS-SB		48"	11,999

THE INFORMATION IN THIS DOCUMENT IS SUBJECT TO CHANGE AT ANY TIME WITHOUT NOTICE.

CONTEMPORARY WALL MOUNT

REC. MOUNTING HEIGHT FROM COOKING SURFACE: 27"

900 CFM CWLH9 OPTIONAL TRANSITION TO 10" ROUND: VP562
1200 CFM CWLH9 OPTIONAL TRANSITION TO 12" ROUND: VP563

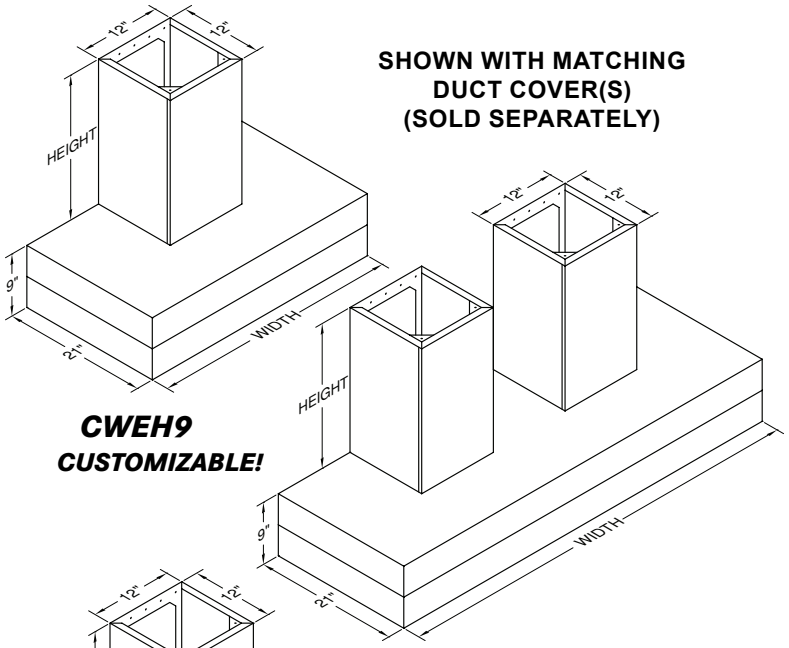

CWEH9
CUSTOMIZABLE!

CWEH9

Model No.	CFM	Width	Painted	Stainless	# Lts
CWEH9-130	300	30"	3,012	4,190	2
CWEH9-136		36"	3,057	4,255	2
CWEH9-142		42"	3,437	4,616	3
CWEH9-148		48"	3,619	4,799	3
CWEH9-230	600	30"	3,675	4,915	2
CWEH9-236		36"	3,721	4,980	2
CWEH9-242		42"	4,102	5,341	3
CWEH9-248		48"	4,265	5,527	3
CWEH9-254		54"	5,078	6,649	4
CWEH9-342	900	42"	5,001	6,412	3
CWEH9-348		48"	5,594	6,575	3
CWEH9-354		54"	6,002	7,769	4
CWEH9-360		60"	6,263	8,172	4
CWEH9-448	1200	48"	6,257	7,303	3
CWEH9-454		54"	6,665	8,497	4
CWEH9-460		60"	6,924	8,900	4
CWEH9-466		66"	7,256	9,301	4

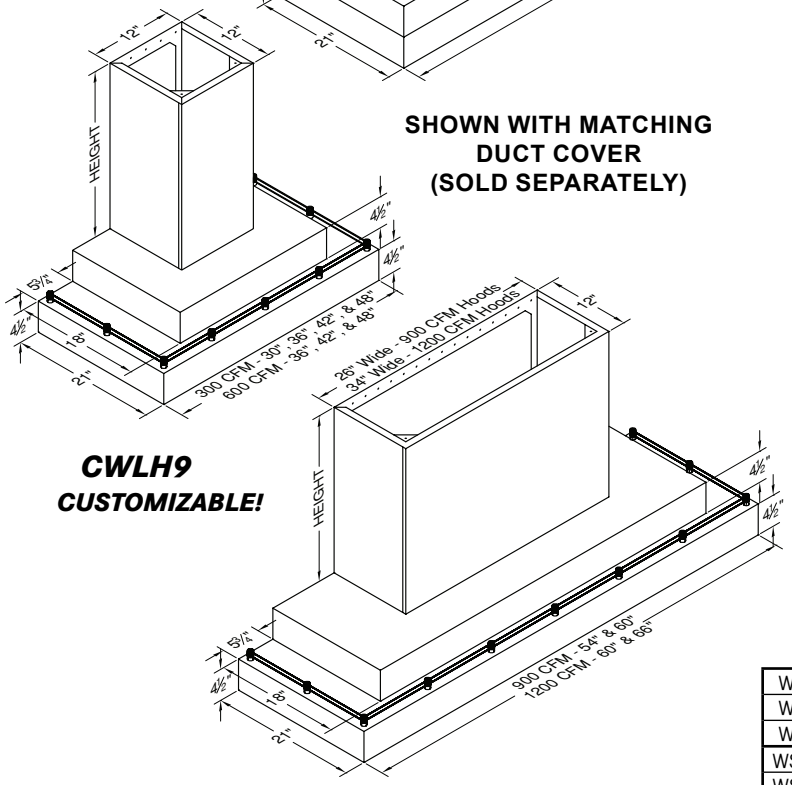

CWLH9
CUSTOMIZABLE!

CWLH9

Model No.	CFM	Width	Painted	Stainless	# Lts
CWLH9-130	300	30"	3,057	4,243	2
CWLH9-136		36"	3,082	4,266	2
CWLH9-142		42"	3,546	4,754	3
CWLH9-148		48"	3,712	4,946	3
CWLH9-236	600	36"	3,771	5,022	2
CWLH9-242		42"	4,235	5,508	3
CWLH9-248		48"	4,400	5,699	3
CWLH9-354	900	54"	6,218	8,042	4
CWLH9-360		60"	6,507	8,452	4
CWLH9-460	1200	60"	7,194	9,205	4
CWLH9-466		66"	7,385	9,472	4

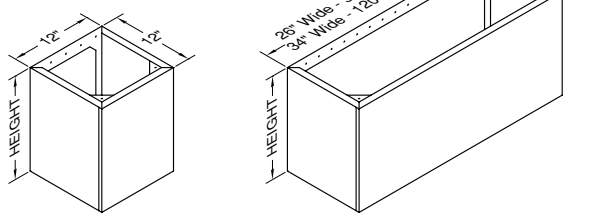

WDCRND FOR CWEH9/CWLH9

Model No.	Width	Height	Painted	Stainless	Ceiling
WDCRND-12/12	12"	12"	792	857	7'
WDCRND-12/24		24"	905	1,054	8'
WDCRND-12/36		36"	1,034	1,230	9'
WSDCRND-26/12	26"	12"	1,018	1,163	7'
WSDCRND-26/24		24"	1,279	1,608	8'
WSDCRND-26/36		36"	1,565	2,035	9'
WDCRND-34/12	34"	12"	1,012	1,208	7'
WDCRND-34/24		24"	1,363	1,737	8'
WDCRND-34/36		36"	1,692	2,285	9'
CUSTOM	WIDTH X HEIGHT X		1.00	1.50	
	PLUS		734		
FINISHED TOP	WIDTH X DEPTH X		1.00	1.50	
	PLUS		428		
SLOPED TOP•	ADD		734		

26" AND 34" DUCT COVERS FOR USE ON MATCHING CWLH9 MODELS.
CEILING BASED ON REC. MAXIMUM HOOD MOUNTING HEIGHT.
•SPECIFY FRONT TO BACK OR LEFT TO RIGHT DIMENSIONS.

CWEH9/CWLH9 VARIATIONS

WIDTHS OVER 66"

	PAINTED	STAINLESS
FOR EACH 6" INCREMENT	332	477
PLUS	428	

SPECIAL WIDTH (LESS THAN 66")
USE NEXT LARGEST SIZE ON PRICE LIST,
PLUS 428

REMOVE GALLEY RAIL (CWLH9 ONLY)
TO REMOVE RAIL, NO CHARGE

THE INFORMATION IN THIS DOCUMENT IS SUBJECT TO CHANGE AT ANY TIME WITHOUT NOTICE.

CONTEMPORARY WALL MOUNT

REC. MOUNTING HEIGHT FROM COOKING SURFACE: 24"

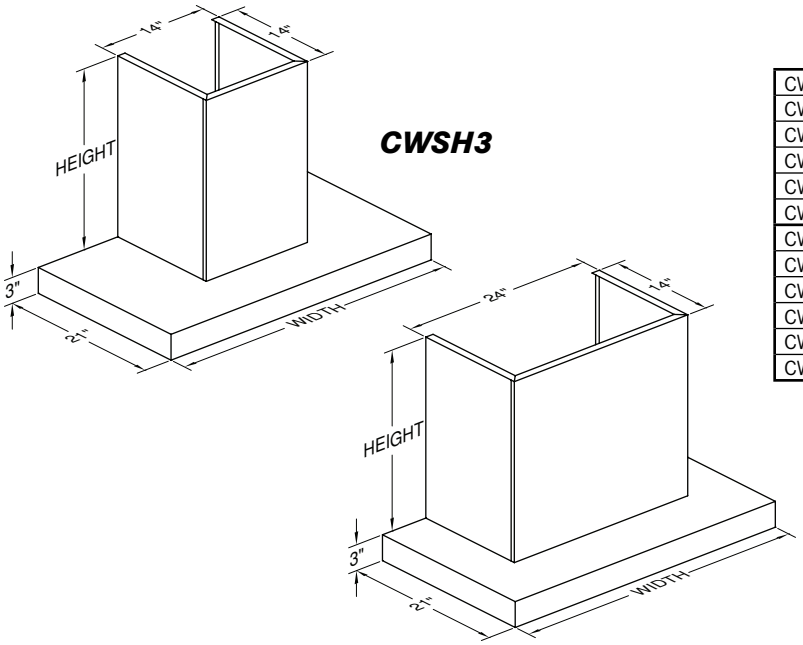

CWSH3

Model No.	CFM	Width	Stainless	# Lts	Ceiling
CWSH3-1/030-21	300	30"	5,252	2	7'
CWSH3-1/030-33		30"	5,468	2	8'
CWSH3-1/036-21		36"	5,252	2	7'
CWSH3-1/036-33		36"	5,468	2	8'
CWSH3-1/042-21		42"	5,664	3	7'
CWSH3-1/042-33		42"	5,878	3	8'
CWSH3-2/030-21	600	30"	7,042	2	7'
CWSH3-2/030-33		30"	7,427	2	8'
CWSH3-2/036-21		36"	7,042	2	7'
CWSH3-2/036-33		36"	7,427	2	8'
CWSH3-2/042-21		42"	7,447	3	7'
CWSH3-2/042-33		42"	7,837	3	8'

THE INFORMATION IN THIS DOCUMENT IS SUBJECT TO CHANGE AT ANY TIME WITHOUT NOTICE.

CONTEMPORARY WALL MOUNT

REC. MOUNTING HEIGHT FROM COOKING SURFACE: 24"

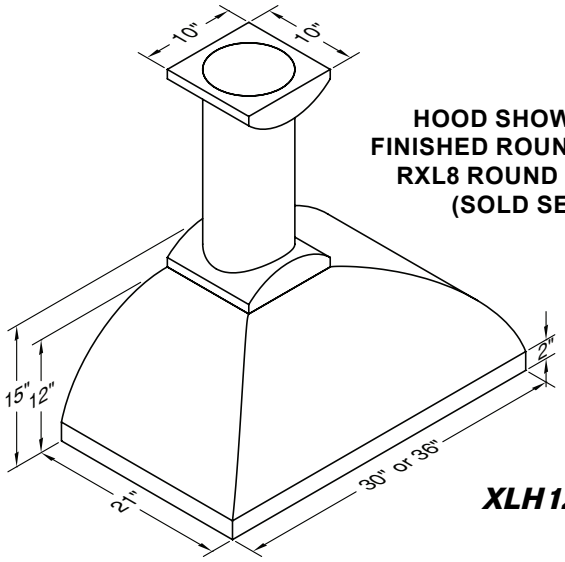

HOOD SHOWN WITH WRDC FINISHED ROUND DUCT AND TWO RXL8 ROUND DUCT COLLARS (SOLD SEPARATELY)

XLH12

XLH12

Model No.	CFM	Width	Stainless	# Lts
BRASS LIP				
XLH12-230B	600	30"	4,249	2
XLH12-236B		36"	4,300	2
COPPER LIP				
XLH12-230C	600	30"	4,249	2
XLH12-236C		36"	4,300	2
MIRROR STAINLESS STEEL LIP				
XLH12-230M	600	30"	4,249	2
XLH12-236M		36"	4,300	2
STAINLESS STEEL LIP				
XLH12-230S	600	30"	4,249	2
XLH12-236S		36"	4,300	2

FINISHED ROUND DUCT REQUIRES TWO DUCT COLLARS (SEE BELOW)

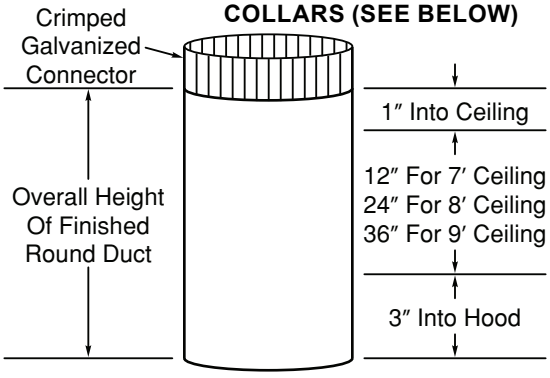

WRDC

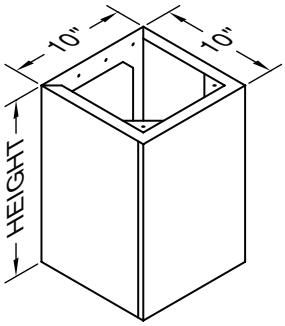

WDCRND

DUCT COVERS FOR XLH12

Model No.	Width	Height	Stainless	Ceiling
WDCRND-10/12	10"	12"	814	7'
WDCRND-10/24		24"	969	8'
WDCRND-10/36		36"	1,122	9'
WRDC-8/16	8"	16"	592	7'
WRDC-8/28		28"	734	8'
WRDC-8/40		40"	852	9'
CUSTOM	WIDTH X HEIGHT X		1.50	
	PLUS		734	
FINISHED TOP	WIDTH X DEPTH X		1.50	
	PLUS		428	
SLOPED TOP•	ADD		734	

WRDC EXTENDS 3" INTO TOP OF HOOD AND 1" INTO CEILING.
CEILING BASED ON REC. MAXIMUM HOOD MOUNTING HEIGHT.
• SPECIFY FRONT TO BACK OR LEFT TO RIGHT DIMENSIONS.

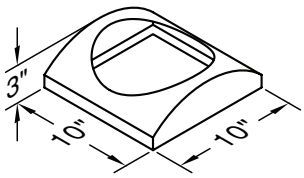

RXL8

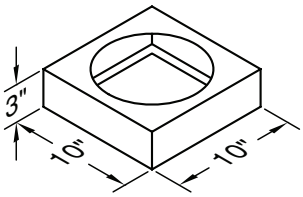

SXL8

WRDC COLLARS

Model No.	Width	Height	Stainless
RXL8	10"	3"	425
SXL8	10"	3"	262

THE INFORMATION IN THIS DOCUMENT IS SUBJECT TO CHANGE AT ANY TIME WITHOUT NOTICE.

CONTEMPORARY WALL MOUNT

REC. MOUNTING HEIGHT FROM COOKING SURFACE: 30"

900 CFM OPTIONAL TRANSITION TO 10" ROUND: VP562

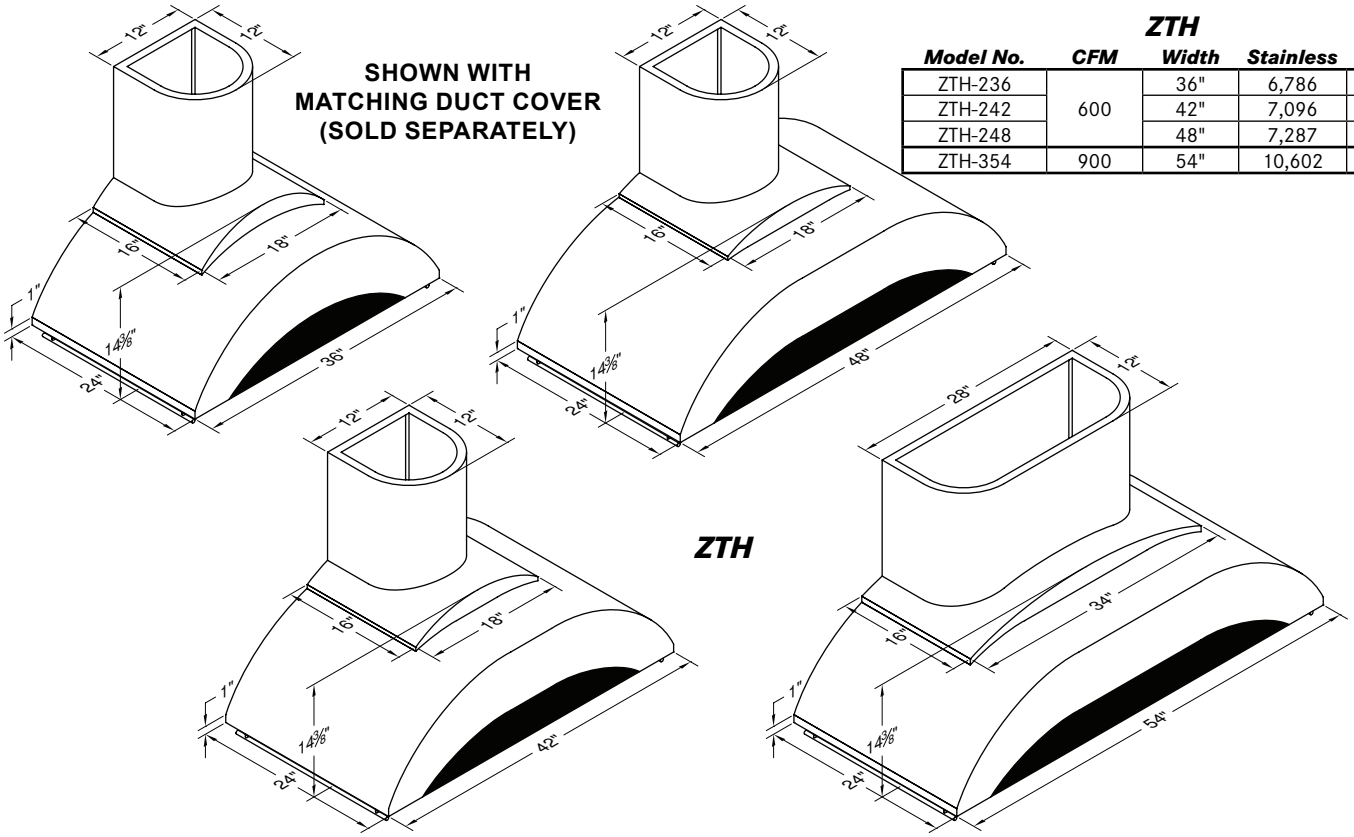

ZTH

Model No.	CFM	Width	Stainless	# Lts
ZTH-236	600	36"	6,786	4
ZTH-242		42"	7,096	4
ZTH-248		48"	7,287	4
ZTH-354	900	54"	10,602	4

ZTH VARIATIONS	
REMOVE FIXED LENGTH SS RAIL	
ADD	428

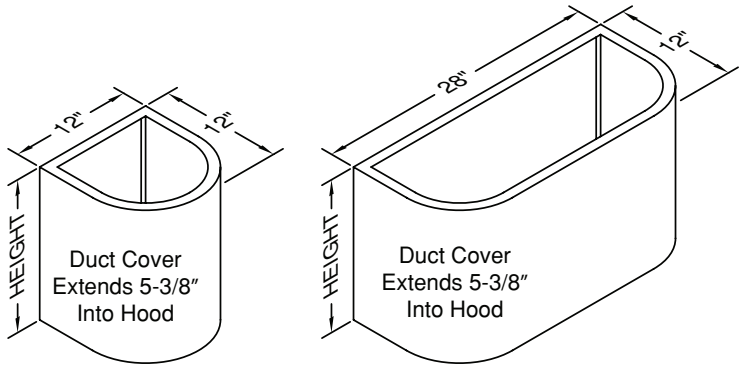

DUCT COVERS FOR ZTH

Model No.	Width	Height	Stainless	Ceiling
WZDC-12/9	12"	9"	852	7'
WZDC-12/21		21"	1,043	8'
WZDC-12/33		33"	1,256	9'
WZDC-28/9	28"	9"	1,043	7'
WZDC-28/21		21"	1,518	8'
WZDC-28/33		33"	1,965	9'
CUSTOM	WIDTH X HEIGHT X		1.50	
	PLUS		734	

CEILING BASED ON REC. MAXIMUM HOOD MOUNTING HEIGHT.

THE INFORMATION IN THIS DOCUMENT IS SUBJECT TO CHANGE AT ANY TIME WITHOUT NOTICE.

EURO-STYLE WALL MOUNT

REC. MOUNTING HEIGHT FROM COOKING SURFACE: 24"

SHOWN WITH MATCHING DUCT COVER (SOLD SEPARATELY)

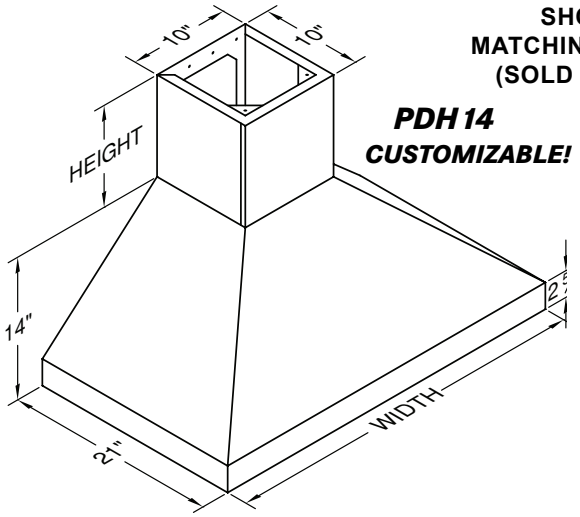

PDH 14
CUSTOMIZABLE!

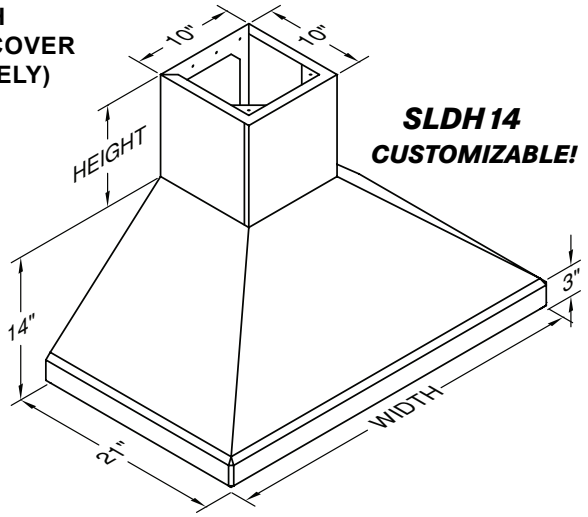

SLDH 14
CUSTOMIZABLE!

PDH 14

Model No.	CFM	Width	Painted	Stainless	Overlay •	# Lts
PDH14-130	300	30"	2,841	3,932	5,820	2
PDH14-136		36"	2,905	3,999	6,067	2
PDH14-142		42"	3,231	4,325	6,660	3
PDH14-148		48"	3,364	4,481	6,997	3
PDH14-236	600	36"	3,566	4,723	6,727	2
PDH14-242		42"	3,892	5,047	7,322	3
PDH14-248		48"	4,024	5,206	7,657	3

• FOR OVERLAY MODELS, SPECIFY INTERIOR COLOR.

SLDH 14

Model No.	CFM	Width	Painted	Stainless	# Lts
SLDH14-130	300	30"	3,577	4,698	2
SLDH14-136		36"	3,647	4,766	2
SLDH14-142		42"	4,092	5,258	3
SLDH14-148		48"	4,252	5,445	3
SLDH14-236	600	36"	4,308	5,491	2
SLDH14-242		42"	4,752	5,986	3
SLDH14-248		48"	4,912	6,168	3

SHOWN WITH MATCHING DUCT COVER (SOLD SEPARATELY)

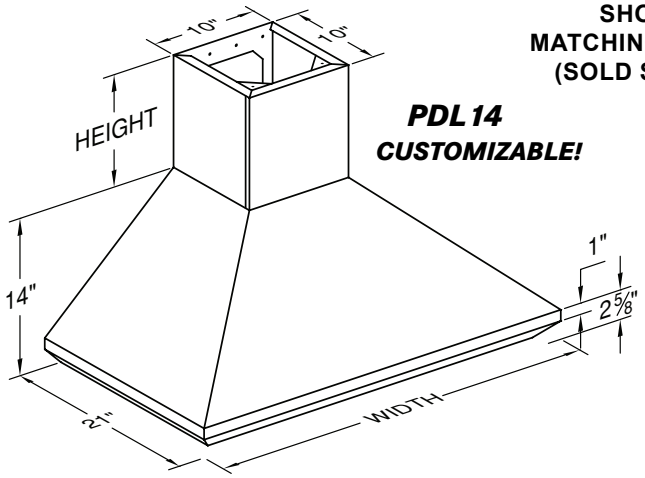

PDL 14
CUSTOMIZABLE!

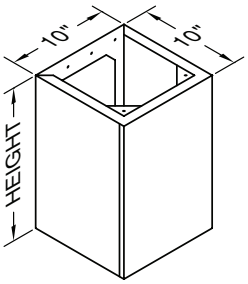

PDL 14

Model No.	CFM	Width	Painted	Stainless	Overlay •	# Lts
PDL14-130	300	30"	2,841	3,932	5,820	2
PDL14-136		36"	2,905	3,999	6,067	2
PDL14-142		42"	3,231	4,325	6,660	3
PDL14-148		48"	3,364	4,481	6,997	3
PDL14-236	600	36"	3,566	4,723	6,727	2
PDL14-242		42"	3,892	5,047	7,322	3
PDL14-248		48"	4,024	5,206	7,657	3

• FOR OVERLAY MODELS, SPECIFY INTERIOR COLOR.

14"T EURO-STYLE WALL MOUNT DUCT COVERS

Model No.	Width	Height	Painted	Stainless	Overlay	Ceiling
WDCRND-10/10	10"	10"	748	814	879	7'
WDCRND-10/22		22"	857	969	1,122	8'
WDCRND-10/34		34"	969	1,122	1,363	9'
CUSTOM	WIDTH X HEIGHT X		1.00	1.50	2.00	
	PLUS		734			
FINISHED TOP	WIDTH X DEPTH X		1.00	1.50	2.00	
	PLUS		428			
SLOPED TOP •	ADD		734			

CEILING BASED ON REC. MAXIMUM HOOD MOUNTING HEIGHT.
• SPECIFY FRONT TO BACK OR LEFT TO RIGHT DIMENSIONS.

14" TALL WALL EURO-STYLE MOUNT HOOD VARIATIONS

SPECIAL WIDTH (LESS THAN 48")
USE NEXT LARGEST SIZE ON PRICE LIST,
PLUS 428

DEPTH OVER 21"

	PAINTED	STAINLESS	OVERLAY
WIDTH X EXTRA DEPTH X	2	3	4
PLUS		734	

STAINLESS STEEL INTERIOR ON OVERLAY HOOD
SUBTRACT PAINTED HOOD PRICE FROM STAINLESS HOOD PRICE

CUSTOM COLOR (SEE CUSTOM COLOR CHART)
ADD 1340

TRIM OPTIONS
SEE PAGES 56-57 FOR FINISH AND TRIM OPTIONS

THE INFORMATION IN THIS DOCUMENT IS SUBJECT TO CHANGE AT ANY TIME WITHOUT NOTICE.

EURO-STYLE WALL MOUNT

REC. MOUNTING HEIGHT FROM COOKING SURFACE: 30"	*900 CFM EPTH18 & NEPTH18 MODELS: VP562 TRANSITION INCLUDED* *1200 CFM EPTH18 & NEPTH18 MODELS: VP563 TRANSITION INCLUDED*

SHOWN WITH MATCHING DUCT COVER (SOLD SEPARATELY)

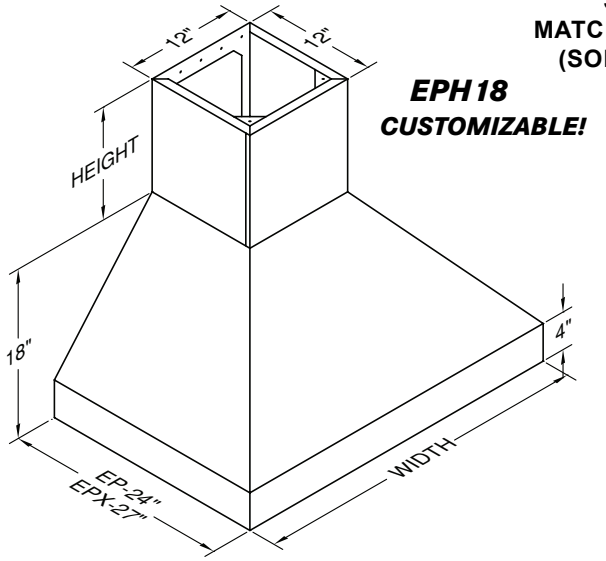

EPH18
CUSTOMIZABLE!

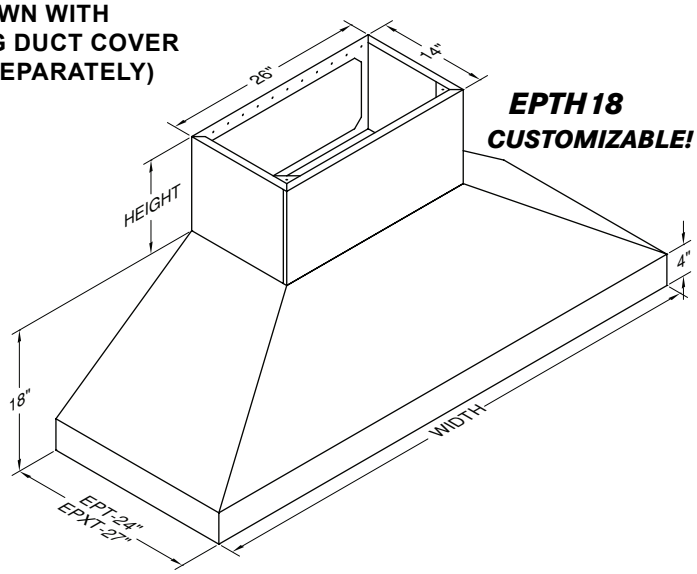

EPTH18
CUSTOMIZABLE!

EPH18/EPXH18

Model No.	CFM	Width	Painted	Stainless	Overlay •	# Lts
EPH18-236	600	36"	4,376	5,535	7,699	2
EPH18-242		42"	4,681	5,854	8,224	3
EPH18-248		48"	4,980	6,194	8,877	3

USE EPXH18 MODEL NUMBER PREFIX FOR 27" DEPTH PROJECTION.
• FOR OVERLAY MODELS, SPECIFY INTERIOR COLOR.

Model No.	CFM	Width	Stainless	# Lts.
EPH18-230SS	600	30"	5,289	2

EPTH18/EPXTH18

Model No.	CFM	Width	Painted	Stainless	Overlay •	# Lts	Incl.
EPTH18-342	900	42"	6,738	8,048	10,472	3	VP562
EPTH18-348		48"	6,902	8,213	10,822	3	VP562
EPTH18-354		54"	7,565	9,419	11,911	4	VP562
EPTH18-360		60"	7,867	9,843	12,476	4	VP562
EPTH18-366		66"	8,146	10,287	13,038	4	VP562
EPTH18-454	1200	54"	8,224	10,141	12,574	4	VP563
EPTH18-460		60"	8,529	10,565	13,136	4	VP563
EPTH18-466		66"	8,807	11,010	13,698	4	VP563

USE EPXTH18 MODEL NUMBER PREFIX FOR 27" DEPTH PROJECTION.
• FOR OVERLAY MODELS, SPECIFY INTERIOR COLOR.

SHOWN WITH MATCHING DUCT COVER (SOLD SEPARATELY)

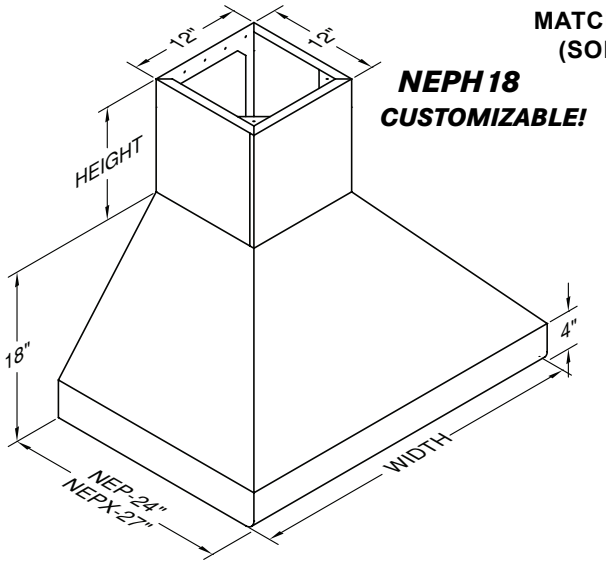

NEPH18
CUSTOMIZABLE!

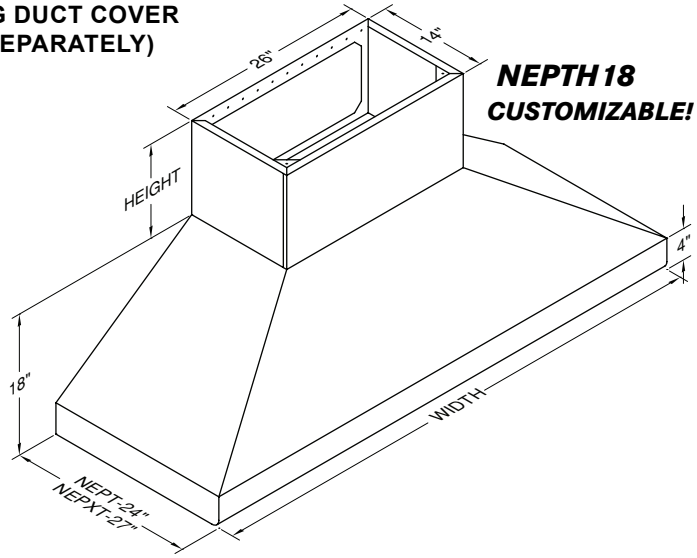

NEPTH18
CUSTOMIZABLE!

NEPH18/NEPXH18

Model No.	CFM	Width	Painted	Stainless	Overlay •	# Lts
NEPH18-236	600	36"	5,216	6,323	7,770	2
NEPH18-242		42"	5,406	6,701	9,506	3
NEPH18-248		48"	5,732	6,968	9,627	3

USE NEPXH18 MODEL NUMBER PREFIX FOR 27" DEPTH PROJECTION.
• FOR OVERLAY MODELS, SPECIFY INTERIOR COLOR.

NEPTH18/NEPXTH18

Model No.	CFM	Width	Painted	Stainless	Overlay •	# Lts	Incl.
NEPTH18-342	900	42"	7,483	9,048	11,380	3	VP562
NEPTH18-348		48"	7,655	9,220	11,743	3	VP562
NEPTH18-354		54"	8,345	10,279	12,880	4	VP562
NEPTH18-360		60"	8,638	10,720	13,466	4	VP562
NEPTH18-366		66"	8,956	11,162	14,055	4	VP562
NEPTH18-454	1200	54"	9,034	11,034	13,567	4	VP563
NEPTH18-460		60"	9,326	11,475	14,154	4	VP563
NEPTH18-466		66"	9,643	11,917	14,741	4	VP563

USE NEPXTH18 MODEL NUMBER PREFIX FOR 27" DEPTH PROJECTION.
• FOR OVERLAY MODELS, SPECIFY INTERIOR COLOR.

THE INFORMATION IN THIS DOCUMENT IS SUBJECT TO CHANGE AT ANY TIME WITHOUT NOTICE.

EURO-STYLE WALL MOUNT

REC. MOUNTING HEIGHT FROM COOKING SURFACE: 30"

900 CFM SEPTH18 MODELS: VP562 TRANSITION INCLUDED
1200 CFM SEPTH18 MODELS: VP563 TRANSITION INCLUDED

SHOWN WITH MATCHING DUCT COVER (SOLD SEPARATELY)

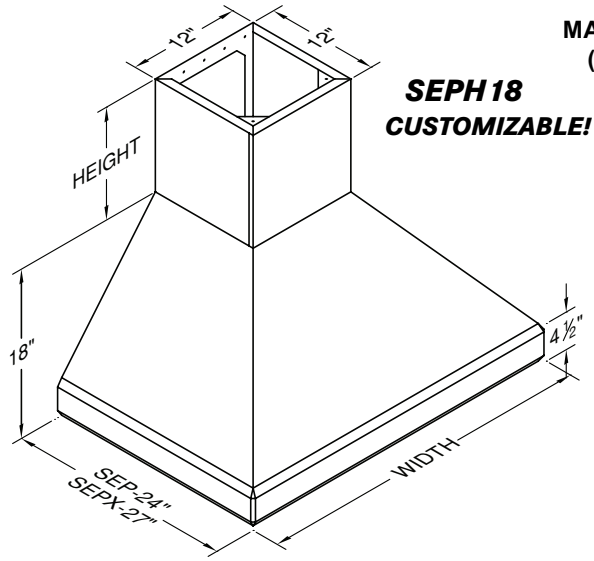

SEPH18
CUSTOMIZABLE!

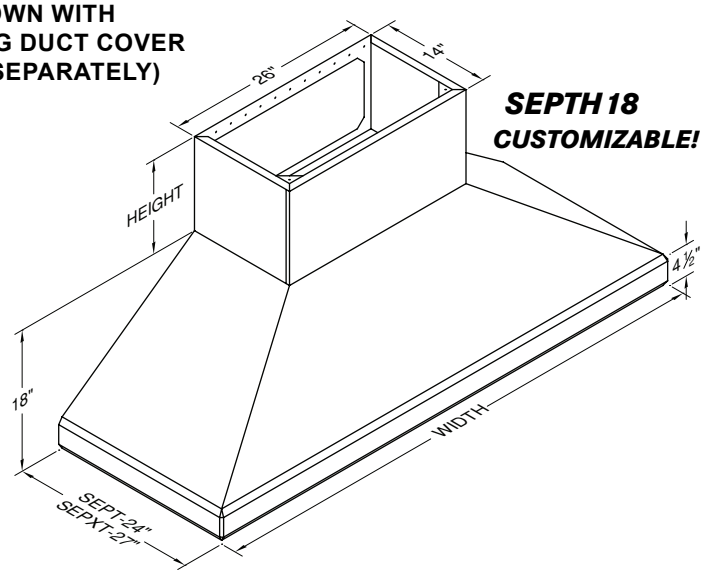

SEPTH18
CUSTOMIZABLE!

SEPH18/SEPXH18

Model No.	CFM	Width	Painted	Stainless	# Lts
SEPH18-236	600	36"	5,207	6,193	2
SEPH18-242		42"	5,535	6,521	3
SEPH18-248		48"	5,696	6,677	3

USE SEPXH18 MODEL NUMBER PREFIX FOR 27" DEPTH PROJECTION.

SEPTH18/SEPXTH18

Model No.	CFM	Width	Painted	Stainless	# Lts	Incl.
SEPTH18-342	900	42"	7,573	9,486	3	VP562
SEPTH18-348		48"	8,214	9,677	3	VP562
SEPTH18-354		54"	8,838	10,681	4	VP562
SEPTH18-360		60"	9,147	11,107	4	VP562
SEPTH18-366		66"	9,431	11,560	4	VP562
SEPTH18-454	1200	54"	9,500	11,405	4	VP563
SEPTH18-460		60"	9,807	11,830	4	VP563
SEPTH18-466		66"	10,093	12,282	4	VP563

USE SEPXTH18 MODEL NUMBER PREFIX FOR 27" DEPTH PROJECTION.

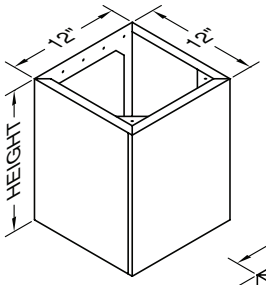

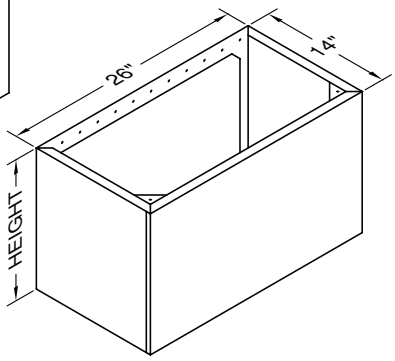

18"T EURO-STYLE WALL MOUNT DUCT COVERS

Model No.	Width	Height	Painted	Stainless	Overlay	Ceiling
WDCRND-12/12	12"	12"	792	857	969	8'
WDCRND-12/24		24"	905	1,054	1,256	9'
WDCRND-12/36		36"	1,034	1,230	1,559	10'
WDCRND-26/12	26"	12"	924	1,079	1,318	8'
WDCRND-26/24		24"	1,188	1,494	1,955	9'
WDCRND-26/36		36"	1,452	1,889	2,596	10'
CUSTOM	WIDTH X HEIGHT X		1.00	1.50	2.00	
	PLUS		734			
FINISHED TOP	WIDTH X DEPTH X		1.00	1.50	2.00	
	PLUS		428			
SLOPED TOP •	ADD		734			

CEILING BASED ON REC. MAXIMUM HOOD MOUNTING HEIGHT.
• SPECIFY FRONT TO BACK OR LEFT TO RIGHT DIMENSIONS.

18" TALL WALL EURO-STYLE MOUNT HOOD VARIATIONS

WIDTHS OVER 48"/66"

	PAINTED	STAINLESS	OVERLAY
FOR EACH 6" INCREMENT	332	477	592
PLUS		428	

DEPTH OVER 24" (EXCLUDING 27")

	PAINTED	STAINLESS	OVERLAY
WIDTH X EXTRA DEPTH X	2	3	4
PLUS		734	

SPECIAL WIDTH (LESS THAN 48"/66")
USE NEXT LARGEST SIZE ON PRICE LIST,
PLUS 428

STAINLESS STEEL INTERIOR ON OVERLAY HOOD
SUBTRACT PAINTED HOOD PRICE FROM STAINLESS HOOD PRICE

CUSTOM COLOR (SEE CUSTOM COLOR CHART)
ADD 1340

TRIM OPTIONS
SEE PAGES 56-57 FOR FINISH AND TRIM OPTIONS

THE INFORMATION IN THIS DOCUMENT IS SUBJECT TO CHANGE AT ANY TIME WITHOUT NOTICE.

DESIGNER SERIES ISLAND

REC. MOUNTING HEIGHT FROM COOKING SURFACE: 30"	MODELS SHOWN WITH MATCHING DUCT COVER (SOLD SEPARATELY)	550 CFM MODELS: VP565 TRANSITION INCLUDED 1100 CFM MODELS: VP564 TRANSITION INCLUDED

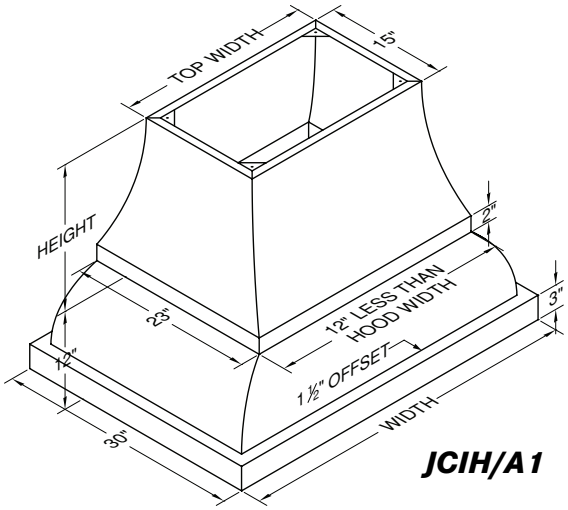

JCIH/A1

JCIH/A1

Model No.	CFM	Width	Top W.	Painted	Stainless	Overlay •	# Lts
JCIH236/A1	550*	36"	24"	6,767	8,795	12,508	4
JCIH242/A1		42"	30"	6,996	9,220	12,982	4
JCIH248/A1		48"	36"	7,194	9,380	13,333	4
JCIH254/A1		54"	42"	7,801	10,164	14,482	4
JCIH448/A1	1100+	48"	36"	8,658	11,251	14,795	4
JCIH454/A1		54"	42"	9,264	12,037	15,944	4
JCIH460/A1		60"	48"	10,222	13,331	19,389	4
JCIH466/A1		66"	54"	10,552	13,761	20,040	4

• FOR OVERLAY HOODS, SPECIFY INTERIOR COLOR.
*VP565 TRANSITION TO 8" ROUND INCLUDED.
+VP564 TRANSITION TO 12" ROUND INCLUDED.

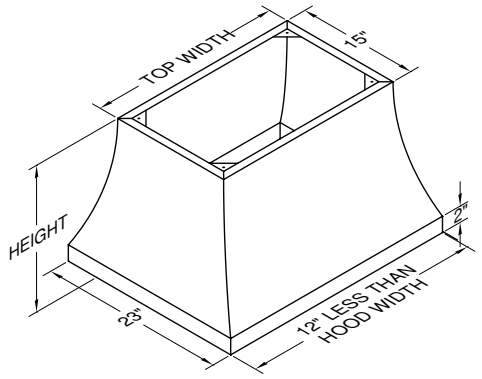

DUCT COVERS FOR JCIH/A1

Model No.	Width	Top W.	Height	Painted	Stainless	Overlay •	Ceiling
ICDC-24/15/18	24"	18"	18"	2,981	3,136	3,560	8'
ICDC-24/15/30		15"	30"	3,296	3,560	4,277	9'
ICDC-24/15/42		15"	42"	3,606	3,988	4,996	10'
ICDC-30/15/18	30"	24"	18"	3,093	3,316	3,832	8'
ICDC-30/15/30		18"	30"	3,495	3,832	4,729	9'
ICDC-30/15/42		18"	42"	3,897	4,369	5,622	10'
ICDC-36/15/18	36"	30"	18"	3,228	3,474	4,099	8'
ICDC-36/15/30		24"	30"	3,695	4,099	5,176	9'
ICDC-36/15/42		18"	42"	4,167	4,749	6,227	10'
ICDC-42/15/18	42"	36"	18"	3,338	3,628	4,369	8'
ICDC-42/15/30		30"	30"	3,897	4,369	5,622	9'
ICDC-42/15/42		24"	42"	4,434	5,108	6,856	10'
ICDC-48/15/18	48"	42"	18"	3,451	3,787	4,637	8'
ICDC-48/15/30		36"	30"	4,077	4,637	6,049	9'
ICDC-48/15/42		30"	42"	4,729	5,490	7,480	10'
ICDC-54/15/18	54"	48"	18"	3,560	3,943	4,904	8'
ICDC-54/15/30		42"	30"	4,277	4,904	6,497	9'
ICDC-54/15/42		36"	42"	4,996	5,868	8,087	10'

• TRIM REQUIRED ON MODELS EXCEEDING 35" WIDTH AND 30" HEIGHT.
CEILING BASED ON REC. MAXIMUM HOOD MOUNTING HEIGHT.

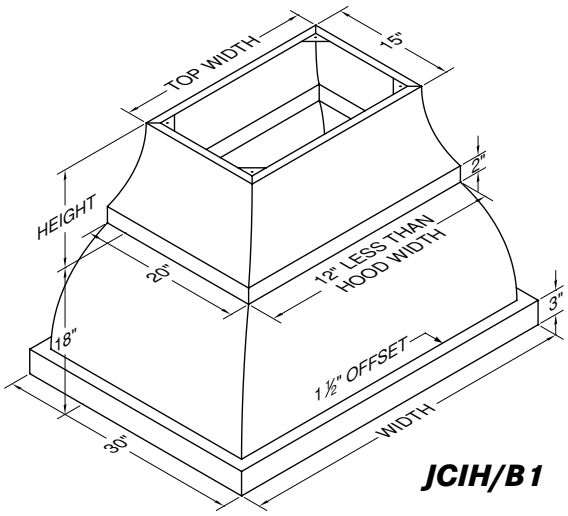

JCIH/B1

JCIH/B1

Model No.	CFM	Width	Top W.	Painted	Stainless	Overlay •	# Lts
JCIH236/B1	550*	36"	24"	6,767	8,795	12,508	4
JCIH242/B1		42"	30"	6,996	9,220	12,982	4
JCIH248/B1		48"	36"	7,194	9,380	13,333	4
JCIH254/B1		54"	42"	7,801	10,164	14,482	4
JCIH448/B1	1100+	48"	36"	8,658	11,251	14,795	4
JCIH454/B1		54"	42"	9,264	12,037	15,944	4
JCIH460/B1		60"	48"	10,222	13,331	19,389	4
JCIH466/B1		66"	54"	10,552	13,761	20,040	4

• FOR OVERLAY HOODS, SPECIFY INTERIOR COLOR.
*VP565 TRANSITION TO 8" ROUND INCLUDED.
+VP564 TRANSITION TO 12" ROUND INCLUDED.

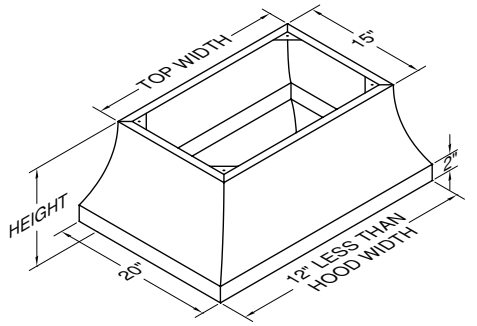

DUCT COVERS FOR JCIH/B1

Model No.	Width	Top W.	Height	Painted	Stainless	Overlay •	Ceiling
ICDC-24/15/12	24"	18"	12"	2,981	3,136	3,560	8'
ICDC-24/15/24		18"	24"	3,296	3,560	4,277	9'
ICDC-24/15/36		15"	36"	3,606	3,988	4,996	10'
ICDC-30/15/12	30"	24"	12"	3,093	3,316	3,832	8'
ICDC-30/15/24		18"	24"	3,495	3,832	4,729	9'
ICDC-30/15/36		18"	36"	3,897	4,369	5,622	10'
ICDC-36/15/12	36"	30"	12"	3,228	3,474	4,099	8'
ICDC-36/15/24		24"	24"	3,695	4,099	5,176	9'
ICDC-36/15/36		18"	36"	4,167	4,749	6,227	10'
ICDC-42/15/12	42"	36"	12"	3,338	3,628	4,369	8'
ICDC-42/15/24		30"	24"	3,897	4,369	5,622	9'
ICDC-42/15/36		24"	36"	4,434	5,108	6,856	10'
ICDC-48/15/12	48"	42"	12"	3,451	3,787	4,637	8'
ICDC-48/15/24		36"	24"	4,077	4,637	6,049	9'
ICDC-48/15/36		30"	36"	4,729	5,490	7,480	10'
ICDC-54/15/12	54"	48"	12"	3,560	3,943	4,904	8'
ICDC-54/15/24		42"	24"	4,277	4,904	6,497	9'
ICDC-54/15/36		36"	36"	4,996	5,868	8,087	10'

• TRIM REQUIRED ON MODELS EXCEEDING 35" WIDTH AND 30" HEIGHT.
CEILING BASED ON REC. MAXIMUM HOOD MOUNTING HEIGHT.

THE INFORMATION IN THIS DOCUMENT IS SUBJECT TO CHANGE AT ANY TIME WITHOUT NOTICE.

DESIGNER SERIES ISLAND

REC. MOUNTING HEIGHT FROM COOKING SURFACE: 30"

550 CFM MODELS: VP565 TRANSITION INCLUDED
1100 CFM MODELS: VP564 TRANSITION INCLUDED

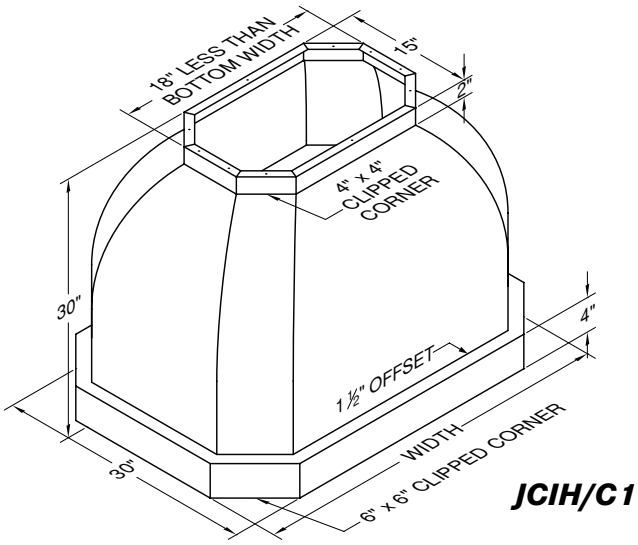

JCIH/C1

JCIH/C1

Model No.	CFM	Width	Painted	Stainless	Overlay •	# Lts
JCIH236/C1	550*	36"	9,323	11,799	15,486	4
JCIH242/C1		42"	9,725	12,384	16,262	4
JCIH248/C1		48"	10,052	12,862	16,388	4
JCIH254/C1		54"	10,757	13,850	18,290	4
JCIH448/C1	1100+	48"	11,513	14,735	17,852	4
JCIH454/C1		54"	12,220	15,722	19,752	4
JCIH460/C1		60"	13,126	17,015	23,056	4
JCIH466/C1		66"	13,606	17,674	23,981	4

• FOR OVERLAY HOODS, SPECIFY INTERIOR COLOR.
*VP565 TRANSITION TO 8" ROUND INCLUDED.
+VP564 TRANSITION TO 12" ROUND INCLUDED.

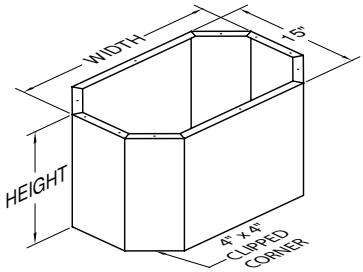

DUCT COVERS FOR JCIH/C1

Model No.	Width	Height	Painted	Stainless	Overlay	Ceiling
IDCC4-18/12	18"	12"	2,240	2,332	2,531	9'
IDCC4-18/24		24"	2,487	2,645	3,068	10'
IDCC4-24/12	24"	12"	2,332	2,419	2,711	9'
IDCC4-24/24		24"	2,645	2,846	3,426	10'
IDCC4-30/12	30"	12"	2,397	2,531	2,891	9'
IDCC4-30/24		24"	2,801	3,068	3,787	10'
IDCC4-36/12	36"	12"	2,487	2,645	3,068	9'
IDCC4-36/24		24"	2,959	3,270	4,125	10'
IDCC4-42/12	42"	12"	2,554	2,757	3,248	9'
IDCC4-42/24		24"	3,116	3,495	4,481	10'
IDCC4-48/12	48"	12"	2,645	2,846	3,426	9'
IDCC4-48/24		24"	3,270	3,695	4,839	10'

CEILING BASED ON REC. MAXIMUM HOOD MOUNTING HEIGHT.

THE INFORMATION IN THIS DOCUMENT IS SUBJECT TO CHANGE AT ANY TIME WITHOUT NOTICE.

DESIGNER SERIES ISLAND

REC. MOUNTING HEIGHT FROM COOKING SURFACE: 30"

550 CFM MODELS: VP565 TRANSITION INCLUDED
1100 CFM MODELS: VP564 TRANSITION INCLUDED

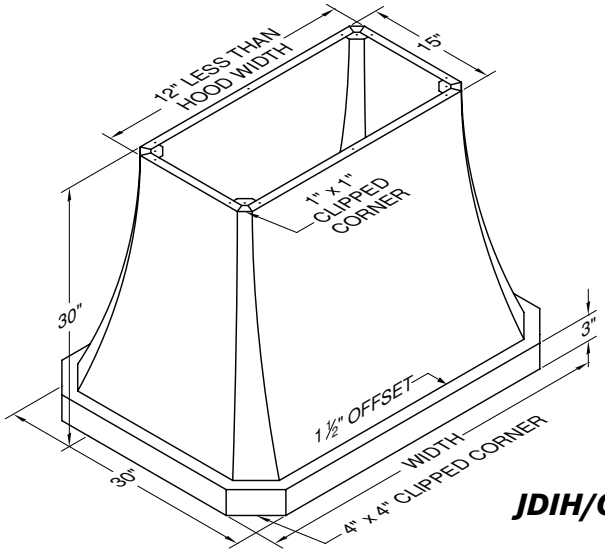

JDIH/C1

JDIH/C1

Model No.	CFM	Width	Painted	Stainless	Overlay •	# Lts
JDIH236/C1	550*	36"	9,323	11,799	15,486	4
JDIH242/C1		42"	9,725	12,384	16,262	4
JDIH248/C1		48"	10,052	12,862	16,388	4
JDIH254/C1		54"	10,757	13,850	18,290	4
JDIH448/C1	1100+	48"	11,513	14,735	17,852	4
JDIH454/C1		54"	12,220	15,722	19,752	4
JDIH460/C1		60"	13,126	17,015	23,056	4
JDIH466/C1		66"	13,606	17,674	23,981	4

• FOR OVERLAY HOODS, SPECIFY INTERIOR COLOR.
*VP565 TRANSITION TO 8" ROUND INCLUDED.
+VP564 TRANSITION TO 12" ROUND INCLUDED.

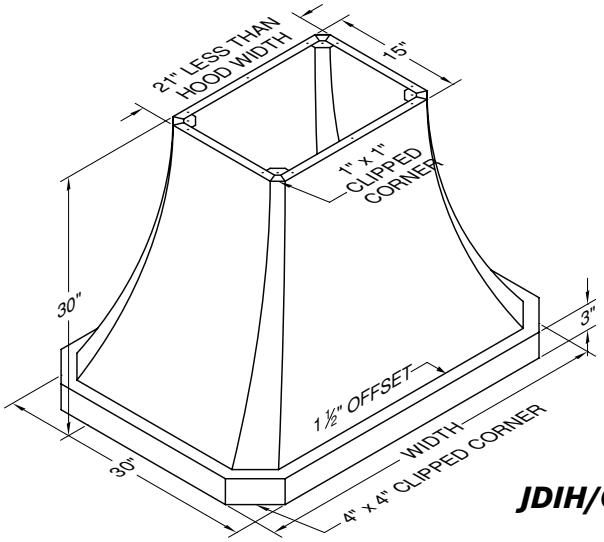

JDIH/C2

JDIH/C2

Model No.	CFM	Width	Painted	Stainless	Overlay •	# Lts
JDIH236/C2	550*	36"	9,323	11,799	15,486	4
JDIH242/C2		42"	9,725	12,384	16,262	4
JDIH248/C2		48"	10,052	12,862	16,388	4
JDIH254/C2		54"	10,757	13,850	18,290	4
JDIH448/C2	1100+	48"	11,513	14,735	17,852	4
JDIH454/C2		54"	12,220	15,722	19,752	4
JDIH460/C2		60"	13,126	17,015	23,056	4
JDIH466/C2		66"	13,606	17,674	23,981	4

• FOR OVERLAY HOODS, SPECIFY INTERIOR COLOR.
*VP565 TRANSITION TO 8" ROUND INCLUDED.
+VP564 TRANSITION TO 12" ROUND INCLUDED.

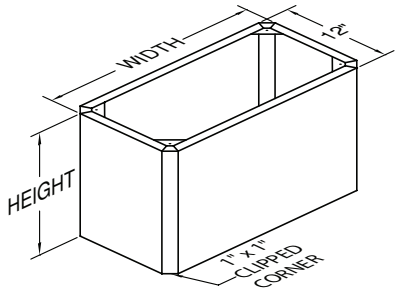

DUCT COVERS FOR JDIH/C1 & JDIH/C2

Model No.	Width	Height	Painted	Stainless	Overlay	Ceiling
IDCC1-15/12	15"	12"	2,195	2,262	2,444	9'
IDCC1-15/24		24"	2,397	2,531	2,891	10'
IDCC1-21/12	21"	12"	2,287	2,375	2,622	9'
IDCC1-21/24		24"	2,554	2,757	3,248	10'
IDCC1-24/12	24"	12"	2,332	2,419	2,711	9'
IDCC1-24/24		24"	2,645	2,846	3,426	10'
IDCC1-27/12	27"	12"	2,352	2,487	2,801	9'
IDCC1-27/24		24"	2,711	2,959	3,606	10'
IDCC1-30/12	30"	12"	2,397	2,531	2,891	9'
IDCC1-30/24		24"	2,801	3,068	3,787	10'
IDCC1-33/12	33"	12"	2,444	2,577	2,981	9'
IDCC1-33/24		24"	2,867	3,183	3,943	10'
IDCC1-36/12	36"	12"	2,487	2,645	3,068	9'
IDCC1-36/24		24"	2,959	3,270	4,125	10'
IDCC1-39/12	39"	12"	2,510	2,690	3,161	9'
IDCC1-39/24		24"	3,026	3,383	4,302	10'
IDCC1-42/12	42"	12"	2,554	2,757	3,248	9'
IDCC1-42/24		24"	3,116	3,495	4,481	10'
IDCC1-45/12	45"	12"	2,597	2,801	3,338	9'
IDCC1-45/24		24"	3,183	3,606	4,662	10'
IDCC1-48/12	48"	12"	2,645	2,846	3,426	9'
IDCC1-48/24		24"	3,270	3,695	4,839	10'
IDCC1-54/12	54"	12"	2,711	2,959	3,606	9'
IDCC1-54/24		24"	3,426	3,920	5,198	10'

• TRIM REQUIRED ON MODELS EXCEEDING 35" WIDTH AND 30" HEIGHT.
CEILING BASED ON REC. MAXIMUM HOOD MOUNTING HEIGHT.

THE INFORMATION IN THIS DOCUMENT IS SUBJECT TO CHANGE AT ANY TIME WITHOUT NOTICE.

DESIGNER SERIES ISLAND

REC. MOUNTING HEIGHT FROM COOKING SURFACE: 30"

550 CFM MODELS: VP565 TRANSITION INCLUDED
1100 CFM MODELS: VP564 TRANSITION INCLUDED

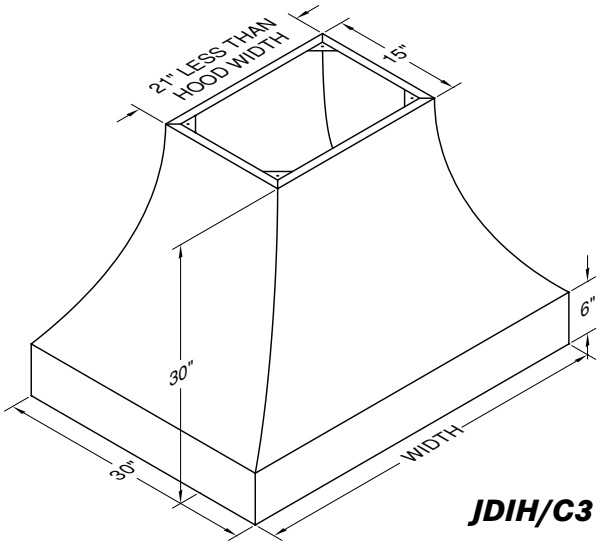

JDIH/C3

JDIH/C3

Model No.	CFM	Width	Painted	Stainless	Overlay •	# Lts
JDIH236/C3	550*	36"	9,323	11,799	15,486	4
JDIH242/C3		42"	9,725	12,384	16,262	4
JDIH248/C3		48"	10,052	12,862	16,388	4
JDIH254/C3		54"	10,757	13,850	18,290	4
JDIH448/C3	1100+	48"	11,513	14,735	17,852	4
JDIH454/C3		54"	12,220	15,722	19,752	4
JDIH460/C3		60"	13,126	17,015	23,056	4
JDIH466/C3		66"	13,606	17,674	23,981	4

• FOR OVERLAY HOODS, SPECIFY INTERIOR COLOR.
*VP565 TRANSITION TO 8" ROUND INCLUDED.
+VP564 TRANSITION TO 12" ROUND INCLUDED.

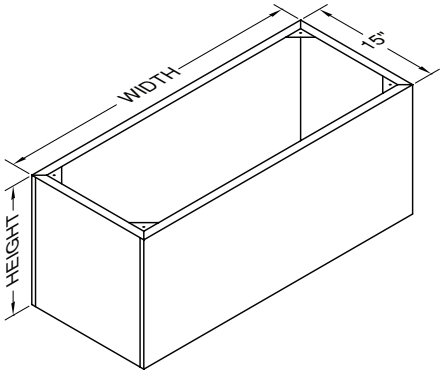

IDCRND FOR JDIH/C3

Model No.	Width	Height	Painted	Stainless	Overlay	Ceiling
IDCRND-15/12	15"	12"	874	942	1,121	8'
IDCRND-15/24		24"	1,076	1,211	1,568	9'
IDCRND-21/12	21"	12"	972	1,070	1,313	9'
IDCRND-21/24		24"	1,248	1,442	1,936	10
IDCRND-27/12	27"	12"	1,048	1,175	1,495	9'
IDCRND-27/24		24"	1,407	1,658	2,291	10
IDCRND-33/12	33"	12"	1,129	1,284	1,672	9'
IDCRND-33/24		24"	1,565	1,872	2,647	10
IDCRND-39/12	39"	12"	1,209	1,389	1,846	9'
IDCRND-39/24		24"	1,723	2,087	2,999	10
IDCRND-45/12	45"	12"	1,289	1,498	2,024	9'
IDCRND-45/24		24"	1,882	2,301	3,353	10
CUSTOM	WIDTH X HEIGHT X		1.00	2.00	3.00	
	PLUS		734			
SLOPED TOP •	ADD		734			

CEILING BASED ON REC. MAXIMUM HOOD MOUNTING HEIGHT.
• SPECIFY FRONT TO BACK OR LEFT TO RIGHT DIMENSIONS.

THE INFORMATION IN THIS DOCUMENT IS SUBJECT TO CHANGE AT ANY TIME WITHOUT NOTICE.

CONTEMPORARY ISLAND

REC. MOUNTING HEIGHT FROM COOKING SURFACE: 30"

550 CFM MODELS: VP565 TRANSITION INCLUDED
1100 CFM MODELS: TWO VP565 TRANSITIONS INCLUDED

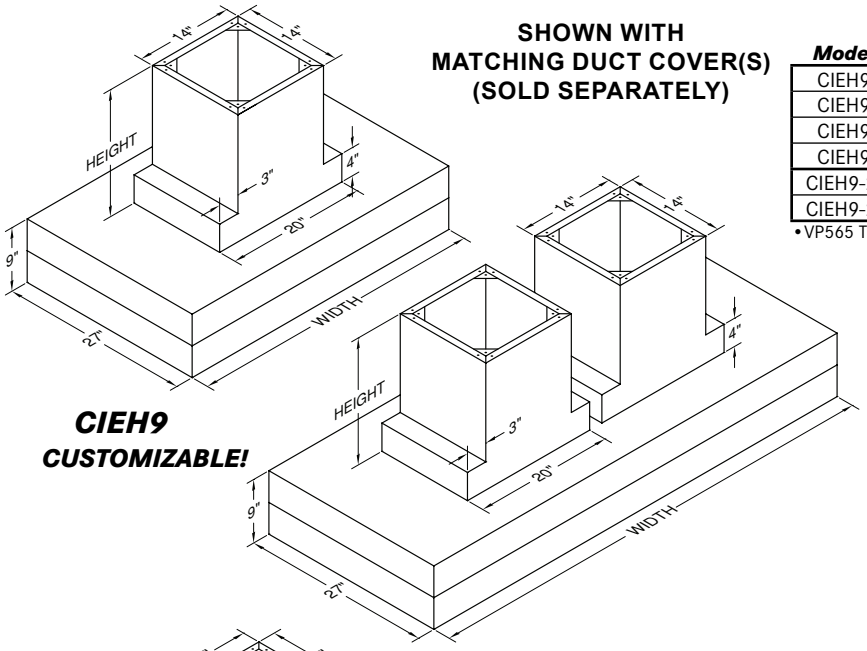

SHOWN WITH MATCHING DUCT COVER(S) (SOLD SEPARATELY)

CIEH9
CUSTOMIZABLE!

CIEH9

Model No.	*CFM •*	*Width*	*Painted*	*Stainless*	*# Lts*
CIEH9-236	550	36"	6,201	7,862	4
CIEH9-242		42"	6,249	8,149	4
CIEH9-248		48"	6,584	8,606	4
CIEH9-254		54"	7,132	9,306	4
CIEH9-2+260	1100	60"	9,549	12,415	6
CIEH9-2+266		66"	9,841	12,830	6

• VP565 TRANSITION TO 8" ROUND INCLUDED WITH EACH DUAL BLOWER.

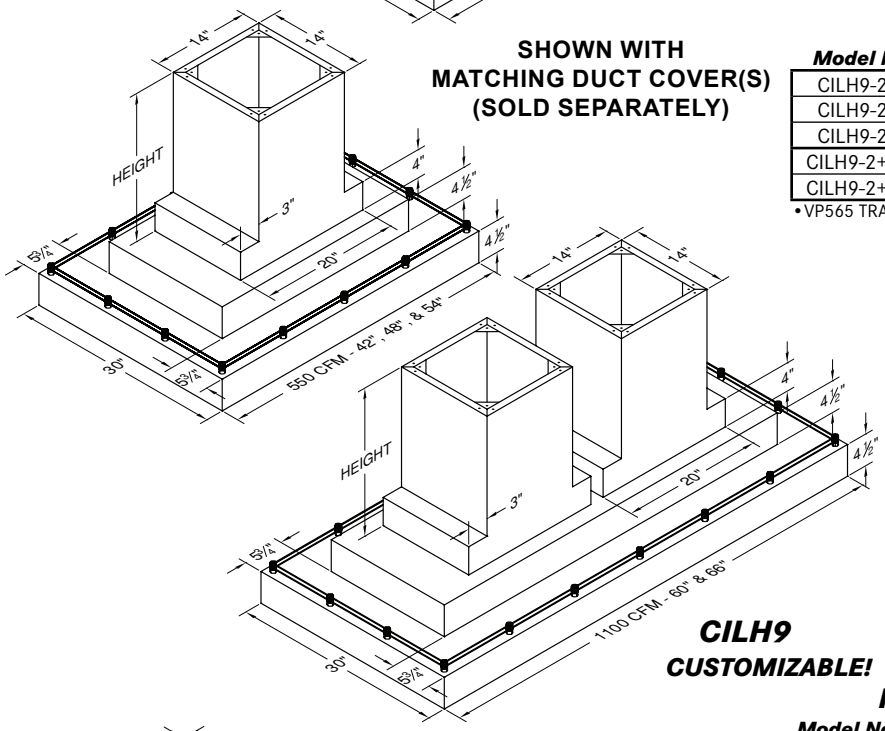

SHOWN WITH MATCHING DUCT COVER(S) (SOLD SEPARATELY)

CILH9

Model No.	*CFM •*	*Width*	*Painted*	*Stainless*	*# Lts*
CILH9-242	550	42"	6,249	8,149	4
CILH9-248		48"	6,584	8,606	4
CILH9-254		54"	7,132	9,326	4
CILH9-2+260	1100	60"	9,768	12,415	6
CILH9-2+266		66"	9,841	12,830	6

• VP565 TRANSITION TO 8" ROUND INCLUDED WITH EACH DUAL BLOWER.

CILH9
CUSTOMIZABLE!

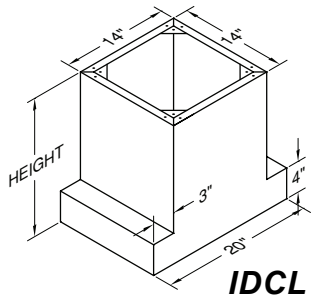

IDCL

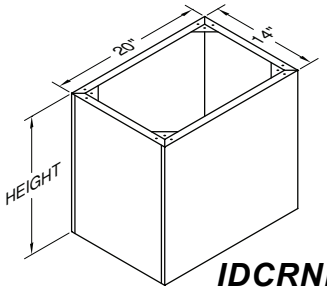

IDCRND

IDCL/IDCRND FOR CIEH9/CILH9

Model No.	*Width*	*Height*	*Painted*	*Stainless*	*Ceiling*
IDCL-14/20/9	20"	9"	874	942	7'
IDCL-14/20/21		21"	1,144	1,299	8'
IDCL-14/20/33		33"	1,411	1,636	9'
IDCRND-14/20/9	20"	9"	874	942	7'
IDCRND-14/20/21		21"	1,144	1,299	8'
IDCRND-14/20/33		33"	1,411	1,636	9'
IDCRND-14/20/45		45"	1,658	1,813	10'
CUSTOM	WIDTH X HEIGHT X		1.00	2.00	
	PLUS		734		
SLOPED TOP •	ADD		734		

CEILING BASED ON REC. MAXIMUM HOOD MOUNTING HEIGHT.
• SPECIFY FRONT TO BACK OR LEFT TO RIGHT DIMENSIONS.

CIEH9/CILH9 VARIATIONS

WIDTHS OVER 66"

	PAINTED	STAINLESS
FOR EACH 6" INCREMENT	379	497
PLUS	428	

SPECIAL WIDTH (LESS THAN 66")
USE NEXT LARGEST SIZE ON PRICE LIST,
PLUS 428

REMOVE GALLEY RAIL (CILH9 ONLY)
TO REMOVE RAIL, NO CHARGE

THE INFORMATION IN THIS DOCUMENT IS SUBJECT TO CHANGE AT ANY TIME WITHOUT NOTICE.

CONTEMPORARY ISLAND

REC. MOUNTING HEIGHT FROM COOKING SURFACE: 30"	***550 CFM MODELS: VP565 TRANSITION INCLUDED*** ***1100 CFM MODELS: VP564 TRANSITION INCLUDED***

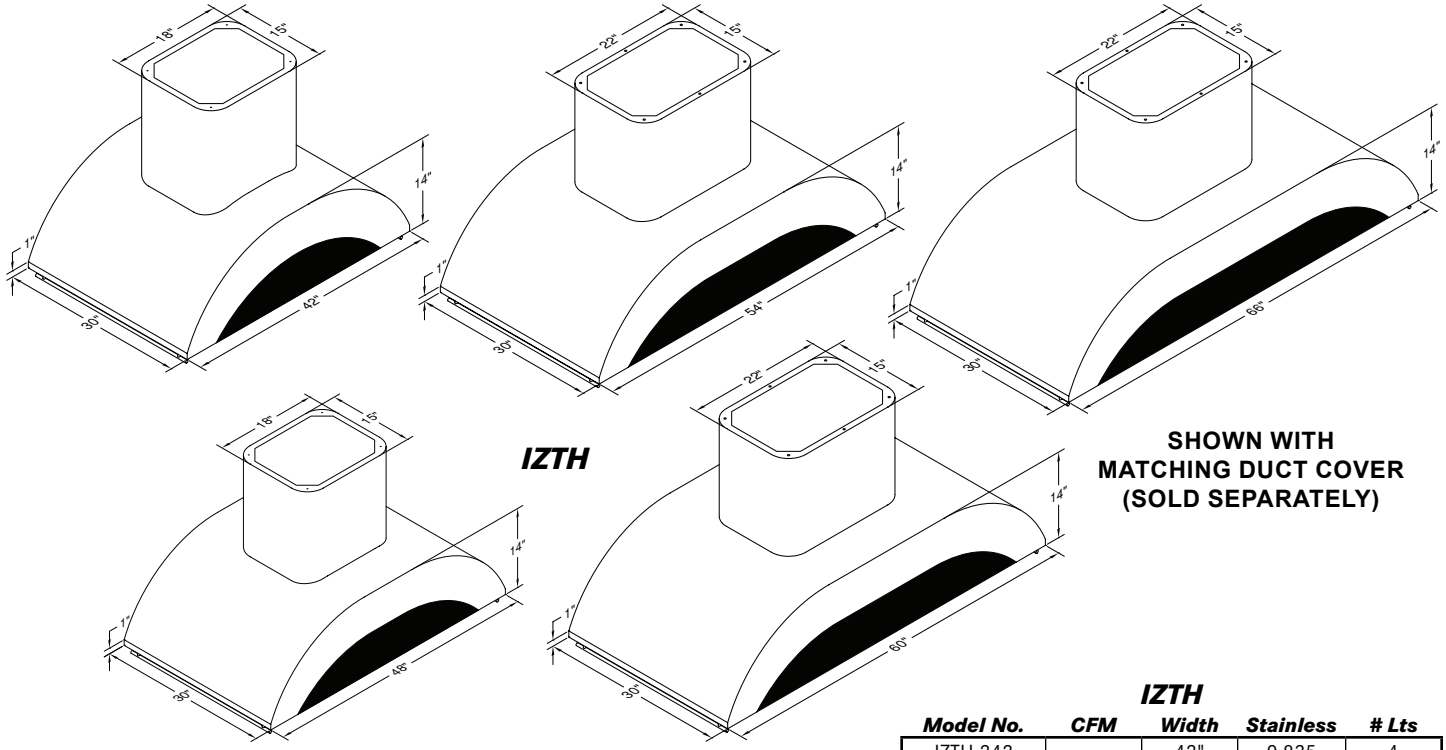

IZTH

SHOWN WITH MATCHING DUCT COVER (SOLD SEPARATELY)

IZTH

Model No.	***CFM***	***Width***	***Stainless***	***# Lts***
IZTH-242	550*	42"	9,835	4
IZTH-248		48"	10,048	4
IZTH-454	1100+	54"	13,047	4
IZTH-460		60"	14,050	4
IZTH-466		66"	14,535	4

*VP565 TRANSITION TO 8" ROUND INCLUDED.
+VP564 TRANSITION TO 12" ROUND INCLUDED.

IZTH VARIATIONS	
REMOVE FIXED LENGTH SS RAIL	
ADD	734

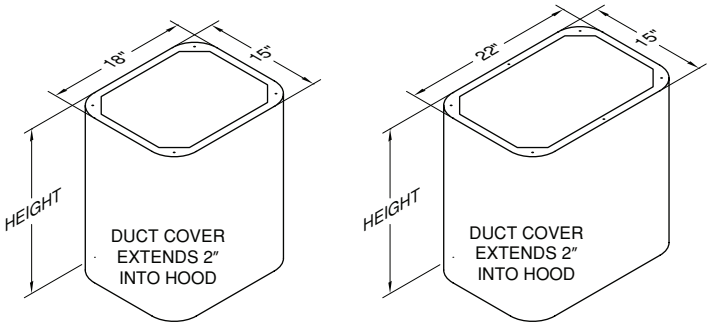

NOTE: DUCT COVER WILL HAVE A VISIBLE SEAM ON ONE SIDE.

DUCT COVERS FOR IZTH

Model No.	***Width***	***Height***	***Stainless***	***Ceiling***
IZDC-18/6	18"	6"	852	7'
IZDC-18/18		18"	1,164	8'
IZDC-18/30		30"	1,480	9'
IZDC-22/6	22"	6"	874	7'
IZDC-22/18		18"	1,253	8'
IZDC-22/30		30"	1,636	9'
CUSTOM	WIDTH X HEIGHT X		2.00	
	PLUS		734	

CEILING BASED ON REC. MAXIMUM HOOD MOUNTING HEIGHT.

THE INFORMATION IN THIS DOCUMENT IS SUBJECT TO CHANGE AT ANY TIME WITHOUT NOTICE.

EURO-STYLE ISLAND

REC. MOUNTING HEIGHT FROM COOKING SURFACE: 30"

550 CFM MODELS: VP565 TRANSITION INCLUDED

SHOWN WITH MATCHING DUCT COVER (SOLD SEPARATELY)

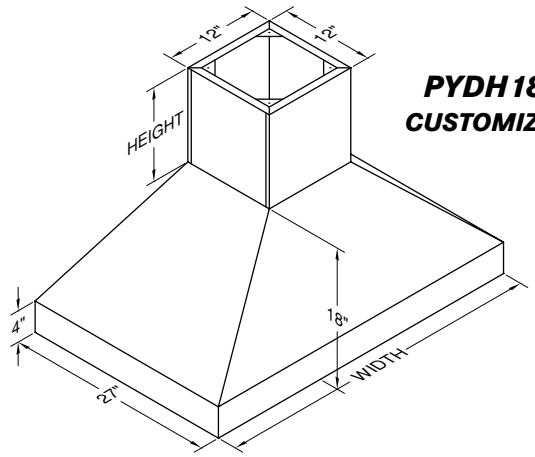

PYDH18
CUSTOMIZABLE!

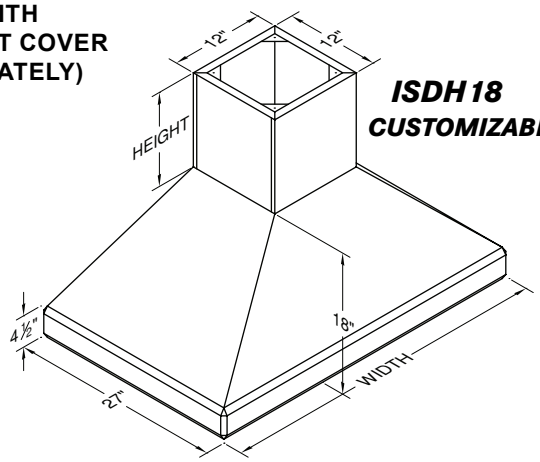

ISDH18
CUSTOMIZABLE!

PYDH18

Model No.	CFM	Width	Painted	Stainless	Overlay •	# Lts
PYDH18-236	550	36"	6,033	7,862	11,484	4
PYDH18-242		42"	6,249	8,149	11,912	4
PYDH18-248		48"	6,584	8,606	12,248	4

• FOR OVERLAY MODELS, SPECIFY INTERIOR COLOR.
VP565 TRANSITION TO 8" ROUND INCLUDED.

ISDH18

Model No.	CFM	Width	Painted	Stainless	# Lts
ISDH18-236	550	36"	6,966	8,846	4
ISDH18-242		42"	7,180	9,133	4
ISDH18-248		48"	7,348	9,351	4

VP565 TRANSITION TO 8" ROUND INCLUDED.

SHOWN WITH MATCHING DUCT COVER (SOLD SEPARATELY)

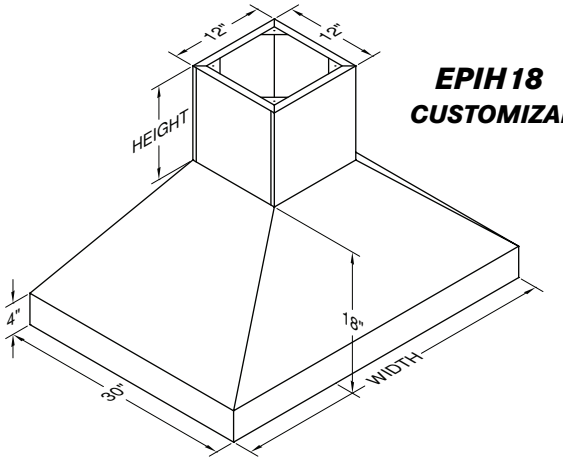

EPIH18
CUSTOMIZABLE!

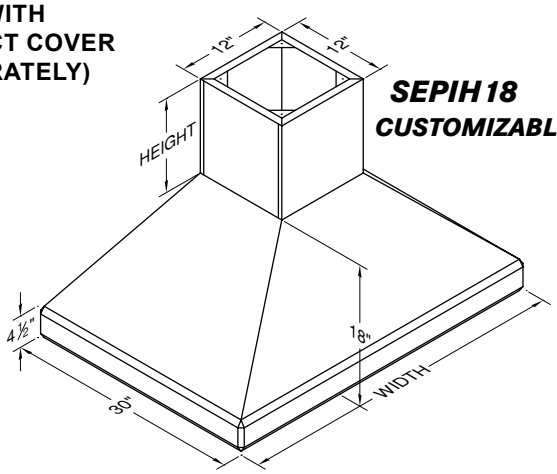

SEPIH18
CUSTOMIZABLE!

EPIH18

Model No.	CFM	Width	Painted	Stainless	Overlay •	# Lts
EPIH18-236	550	36"	6,201	7,862	11,484	4
EPIH18-242		42"	6,415	8,149	11,912	4
EPIH18-248		48"	6,584	8,606	12,248	4

• FOR OVERLAY MODELS, SPECIFY INTERIOR COLOR.
VP565 TRANSITION TO 8" ROUND INCLUDED.

SEPIH18

Model No.	CFM	Width	Painted	Stainless	# Lts
SEPIH18-236	550	36"	6,966	8,328	4
SEPIH18-242		42"	7,180	8,606	4
SEPIH18-248		48"	7,348	9,087	4

VP565 TRANSITION TO 8" ROUND INCLUDED.

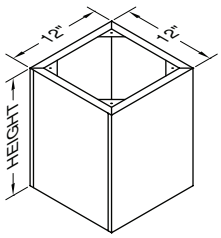

550 CFM EURO-STYLE ISLAND DUCT COVERS

Model No.	Width	Height	Painted	Stainless	Overlay	Ceiling
IDCRND-12/12	12"	12"	852	897	1,032	8'
IDCRND-12/24		24"	1,009	1,101	1,389	9'
IDCRND-12/36		36"	1,164	1,323	1,725	10'
CUSTOM	WIDTH X HEIGHT X		1.00	2.00	3.00	
	PLUS		734			
SLOPED TOP •	ADD		734			

CEILING BASED ON REC. MAXIMUM HOOD MOUNTING HEIGHT.
• SPECIFY FRONT TO BACK OR LEFT TO RIGHT DIMENSIONS.

550 CFM EURO-STYLE ISLAND HOOD VARIATIONS

SPECIAL WIDTH (LESS THAN 48")
USE NEXT LARGEST SIZE ON PRICE LIST,
PLUS 428

DEPTH OVER 27"/30"

	PAINTED	STAINLESS	OVERLAY
WIDTH X EXTRA DEPTH X	2	4	5
PLUS		734	

STAINLESS STEEL INTERIOR ON OVERLAY HOOD
SUBTRACT PAINTED HOOD PRICE FROM STAINLESS HOOD PRICE

REMOTE BLOWER OPTIONS
SEE PAGES 50-51 FOR REMOTE BLOWER OPTIONS

CUSTOM COLOR (SEE CUSTOM COLOR CHART)
ADD 1340

TRIM OPTIONS
SEE PAGES 56-57 FOR FINISH AND TRIM OPTIONS

THE INFORMATION IN THIS DOCUMENT IS SUBJECT TO CHANGE AT ANY TIME WITHOUT NOTICE.

EURO-STYLE ISLAND

REC. MOUNTING HEIGHT FROM COOKING SURFACE: 30"

1100 CFM MODELS: VP564 TRANSITION INCLUDED

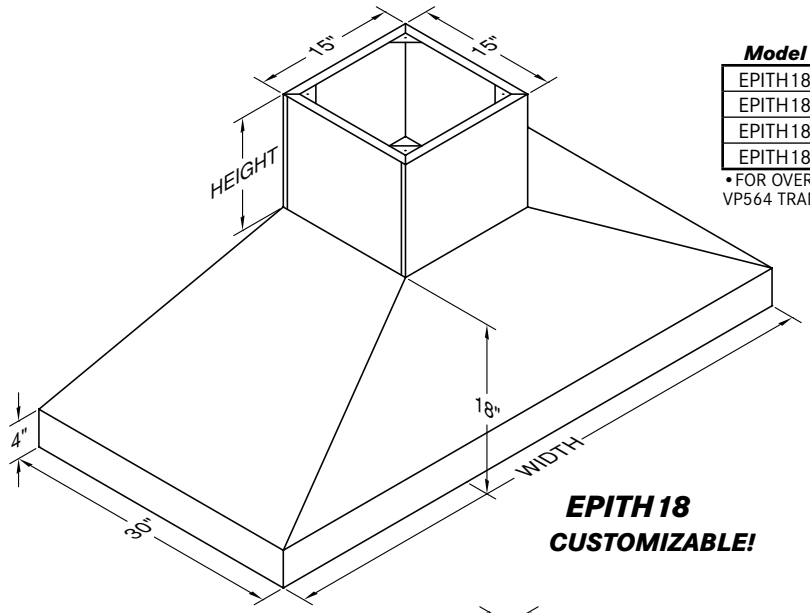

EPITH 18

Model No.	CFM	Width	Painted	Stainless	Overlay •	# Lts
EPITH18-448	1100	48"	8,421	10,504	14,241	4
EPITH18-454		54"	9,253	11,437	15,491	4
EPITH18-460		60"	9,619	12,249	16,298	4
EPITH18-466		66"	10,011	12,760	17,130	4

• FOR OVERLAY HOODS, SPECIFY INTERIOR COLOR.
VP564 TRANSITION TO 12" ROUND INCLUDED.

SHOWN WITH MATCHING DUCT COVER (SOLD SEPARATELY)

EPITH 18
CUSTOMIZABLE!

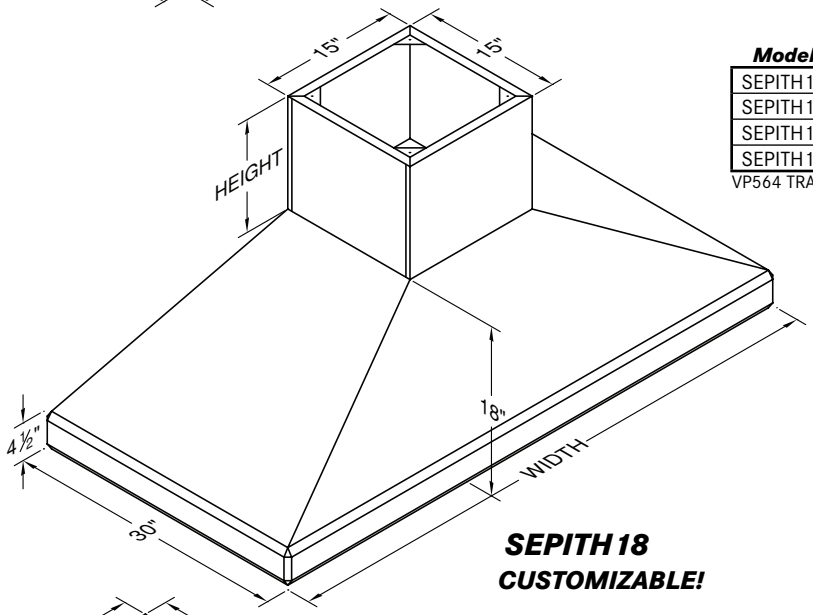

SEPITH 18

Model No.	CFM	Width	Painted	Stainless	# Lts
SEPITH18-448	1100	48"	9,202	11,510	4
SEPITH18-454		54"	10,037	12,493	4
SEPITH18-460		60"	10,403	13,007	4
SEPITH18-466		66"	10,768	13,549	4

VP564 TRANSITION TO 12" ROUND INCLUDED.

SHOWN WITH MATCHING DUCT COVER (SOLD SEPARATELY)

SEPITH 18
CUSTOMIZABLE!

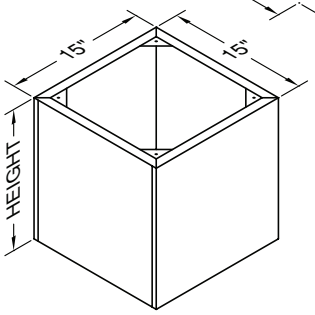

1100 CFM EURO-STYLE ISLAND DUCT COVERS

Model No.	Width	Height	Painted	Stainless	Overlay	Ceiling
IDCRND-15/12	15"	12"	874	942	1,121	8'
IDCRND-15/24		24"	1,076	1,211	1,568	9'
IDCRND-15/36		36"	1,279	1,480	1,979	10'
CUSTOM	WIDTH X HEIGHT X		1.00	2.00	3.00	
	PLUS		734			
SLOPED TOP •	ADD		734			

CEILING BASED ON REC. MAXIMUM HOOD MOUNTING HEIGHT.
• SPECIFY FRONT TO BACK OR LEFT TO RIGHT DIMENSIONS.

1100 CFM EURO-STYLE ISLAND HOOD VARIATIONS

WIDTHS OVER 66"

	PAINTED	STAINLESS	OVERLAY
FOR EACH 6" INCREMENT	379	497	782
PLUS		428	

SPECIAL WIDTH (LESS THAN 66")
USE NEXT LARGEST SIZE ON PRICE LIST,
PLUS 428

DEPTH OVER 30"

	PAINTED	STAINLESS	OVERLAY
WIDTH X EXTRA DEPTH X	2	4	5
PLUS		734	

STAINLESS STEEL INTERIOR ON OVERLAY HOOD
SUBTRACT PAINTED HOOD PRICE FROM STAINLESS HOOD PRICE

REMOTE BLOWER OPTIONS
SEE PAGES 50-51 FOR REMOTE BLOWER OPTIONS

CUSTOM COLOR (SEE CUSTOM COLOR CHART)
ADD 1340

TRIM OPTIONS
SEE PAGES 56-57 FOR FINISH AND TRIM OPTIONS

THE INFORMATION IN THIS DOCUMENT IS SUBJECT TO CHANGE AT ANY TIME WITHOUT NOTICE.

OTHER ISLAND STYLES

THESE MODELS HAVE BEEN REMOVED FROM OUR PRICING LITERATURE BUT THAT DOES NOT MEAN THAT THEY HAVE BEEN DISCONTINUED. PLEASE CONTACT THE FACTORY FOR PRICING DETAILS ON THESE HOODS.

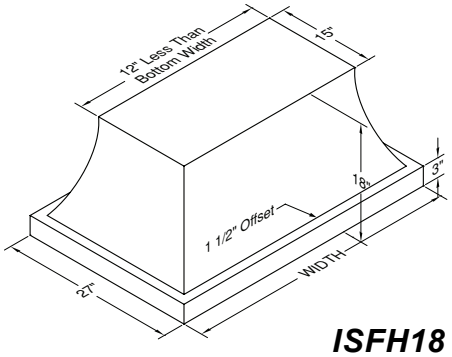

ISFH18

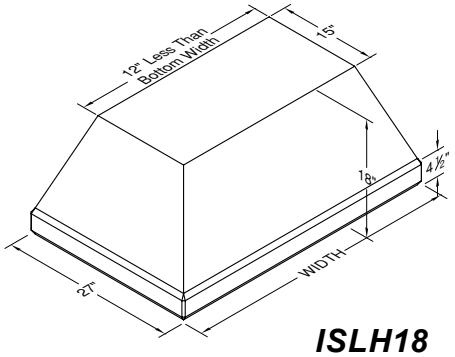

ISLH18

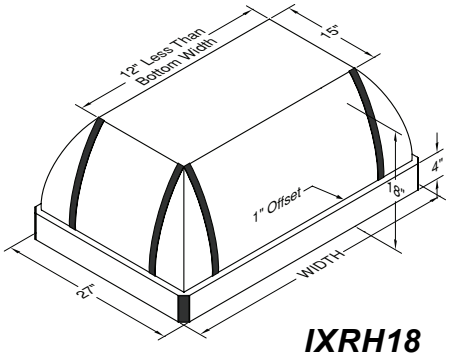

IXRH18

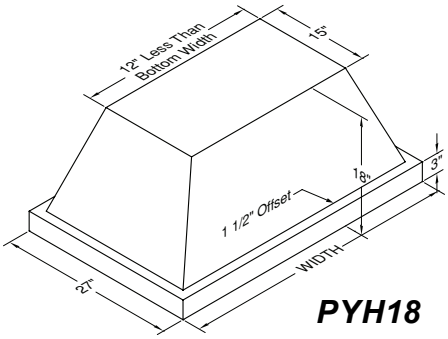

PYH18

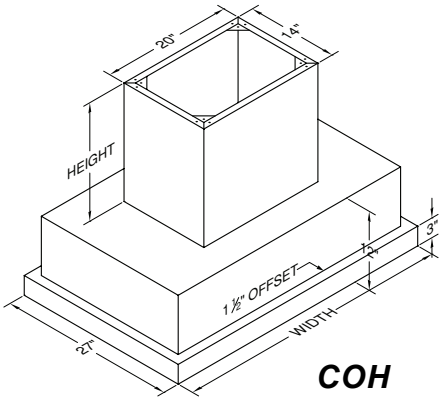

COH

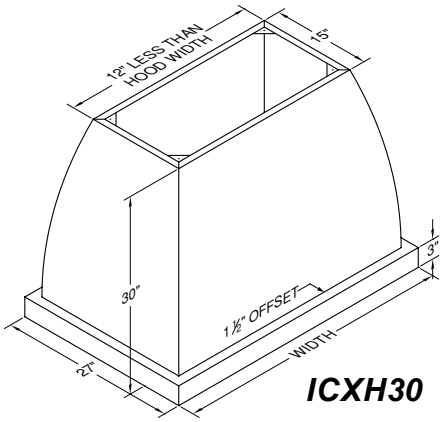

ICXH30

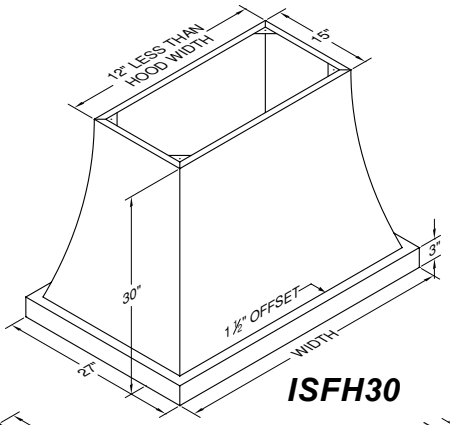

ISFH30

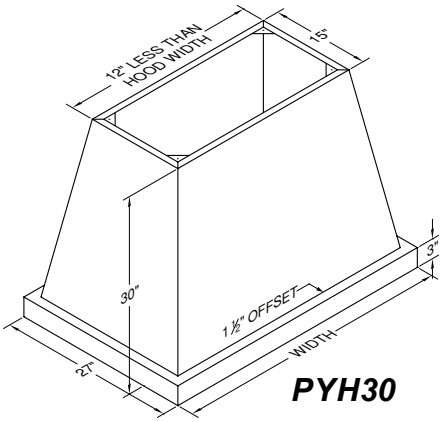

PYH30

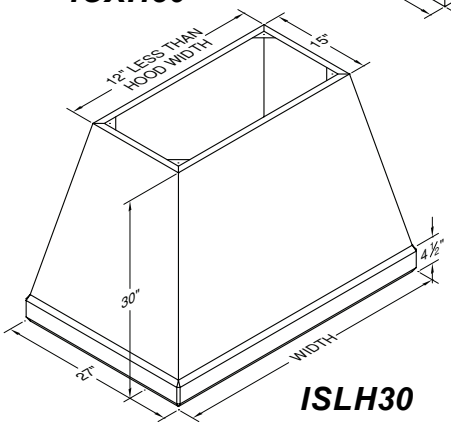

ISLH30

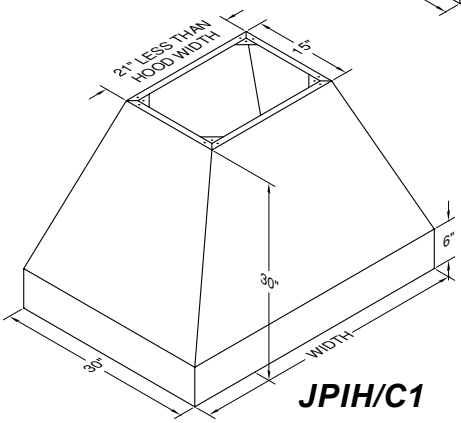

JPIH/C1

THE INFORMATION IN THIS DOCUMENT IS SUBJECT TO CHANGE AT ANY TIME WITHOUT NOTICE.

WALL MOUNT LINER INSERTS

REC. MOUNTING HEIGHT FROM COOKING SURFACE:
BHSLD: 24"-27"
BHPSLD & BHPSLB: 27"-30"

900 CFM OPTIONAL TRANSITION TO 10" ROUND: VP562
1200 CFM OPTIONAL TRANSITION TO 12" ROUND: VP563

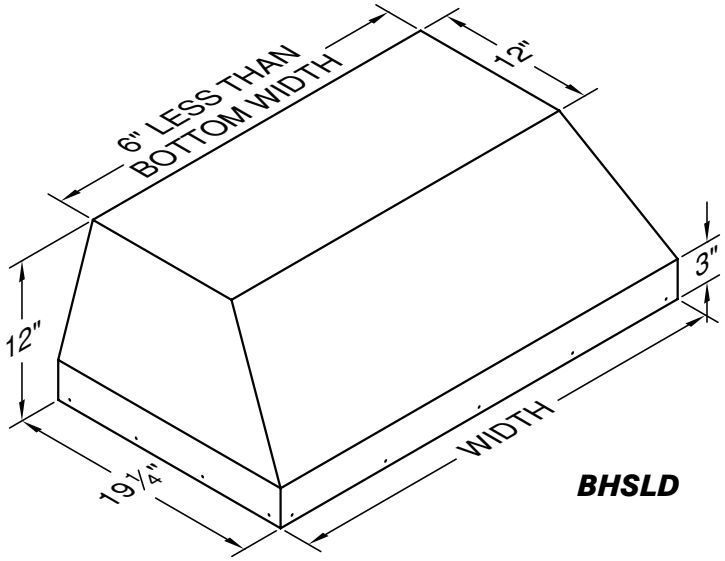

BHSLD

BHSLD

Model No.	CFM	Width	Painted	Stainless	# Lts
BH128SLD	300	28 3/8"	1,599	1,999	2
BH134SLD		34 3/8"	1,599	1,999	2
BH140SLD		40 3/8"	1,899	2,488	2
BH228SLD	600	28 3/8"	2,299	2,874	2
BH234SLD		34 3/8"	2,299	2,989	2
BH240SLD		40 3/8"	2,678	3,219	2
BH246SLD		46 3/8"	2,874	3,449	3
BH346SLD	900	46 3/8"	3,621	4,334	3

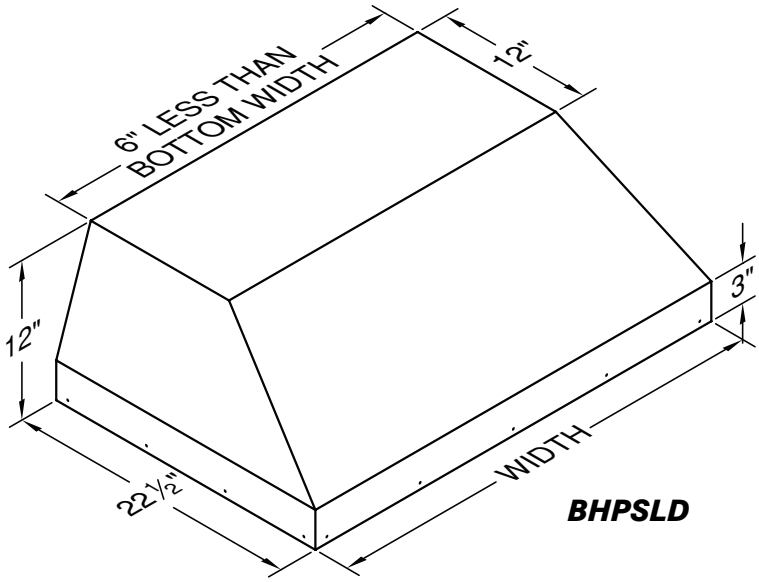

BHPSLD

BHPSLD

Model No.	CFM	Width	Painted	Stainless	# Lts
BH128PSLD	300	28 3/8"	1,599	1,999	2
BH134PSLD		34 3/8"	1,599	1,999	2
BH140PSLD		40 3/8"	1,899	2,488	2
BH146PSLD		46 3/8"	2,260	3,096	2
BH152PSLD		52 3/8"	2,832	3,898	2
BH228PSLD	600	28 3/8"	2,414	2,973	2
BH234PSLD		34 3/8"	2,299	2,989	2
BH240PSLD		40 3/8"	2,678	3,276	2
BH246PSLD		46 3/8"	2,989	3,449	3
BH252PSLD		52 3/8"	3,449	4,369	3
BH346PSLD	900	46 3/8"	3,679	4,369	3
BH352PSLD		52 3/8"	4,139	5,289	3
BH358PSLD		58 3/8"	4,944	6,209	4
BH452PSLD	1200	52 3/8"	5,634	6,094	3
BH458PSLD		58 3/8"	5,634	6,899	4
BH464PSLD		64 3/8"	5,749	7,359	4

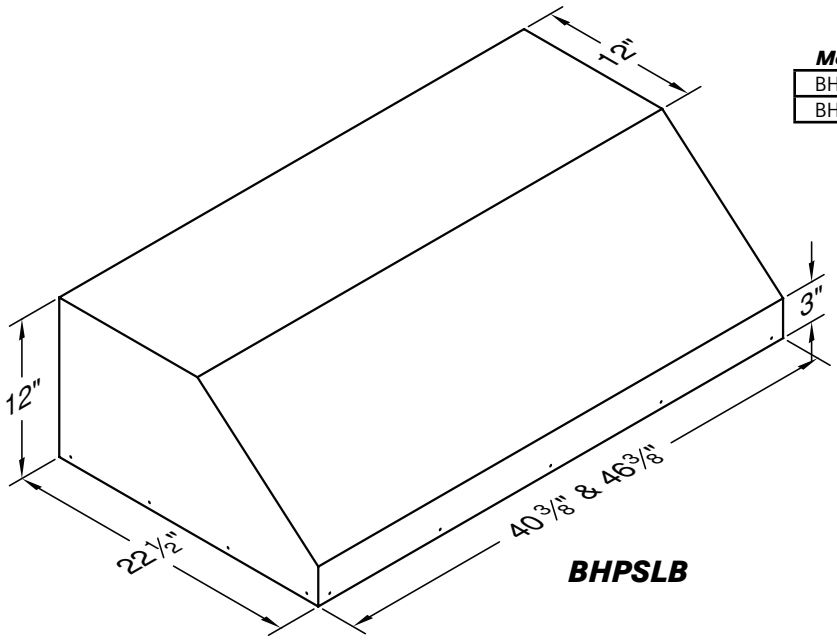

BHPSLB

BHPSLB

Model No.	CFM	Width	Painted	Stainless	# Lts
BH340PSLB	900	40 3/8"	3,679	4,369	3
BH446PSLB	1200	46 3/8"	4,484	5,404	3

Special Depth Liners

Model No.	CFM	Width	Price
BH128SLDSS-16	300	28 3/8"	2,733
BH128SLDSS-18		28 3/8"	2,733
BH128SLDBC-16		28 3/8"	2,333
BH134SLDSS-16		34 3/8"	2,733
BH134SLDSS-18		34 3/8"	2,733
BH134SLDBC-16		34 3/8"	2,333
BH228SLDSS-16	600	28 3/8"	3,219
BH228SLDSS-18		28 3/8"	3,219
BH234SLDBC-16		34 3/8"	3,033
BH234SLDSS-16		34 3/8"	3,219
BH234SLDSS-18		34 3/8"	3,219
BH240SLDSS-16		40 3/8"	3,953
BH240SLDSS-18		40 3/8"	3,953
BH246SLDSS-16		46 3/8"	4,183
BH246SLDSS-18		46 3/8"	4,183

THE INFORMATION IN THIS DOCUMENT IS SUBJECT TO CHANGE AT ANY TIME WITHOUT NOTICE.

WALL MOUNT LINER INSERTS

REC. MOUNTING HEIGHT FROM COOKING SURFACE: 23 3/4"

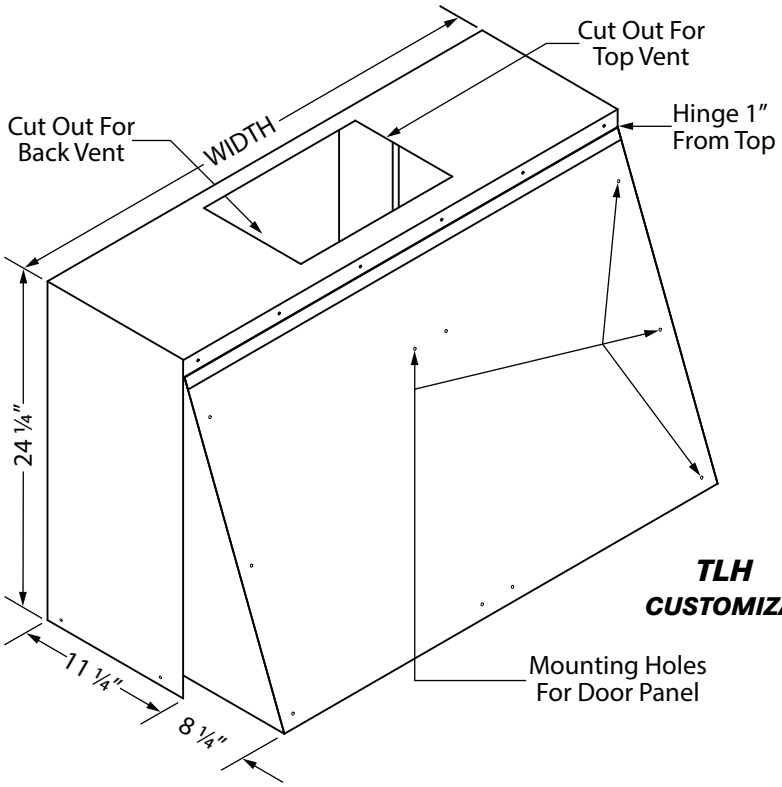

TLH
CUSTOMIZABLE!

TLH

Model No.	CFM	Width	Painted	Stainless	# Lts
TLH-130	300	30"	3,158	4,276	2
TLH-136		36"	3,231	4,324	2
TLH-142		42"	3,482	4,599	3
TLH-148		48"	3,622	4,766	3
TLH-230	600	30"	3,847	5,029	2
TLH-236		36"	3,920	5,078	2
TLH-242		42"	4,170	5,353	3
TLH-248		48"	4,311	5,521	3

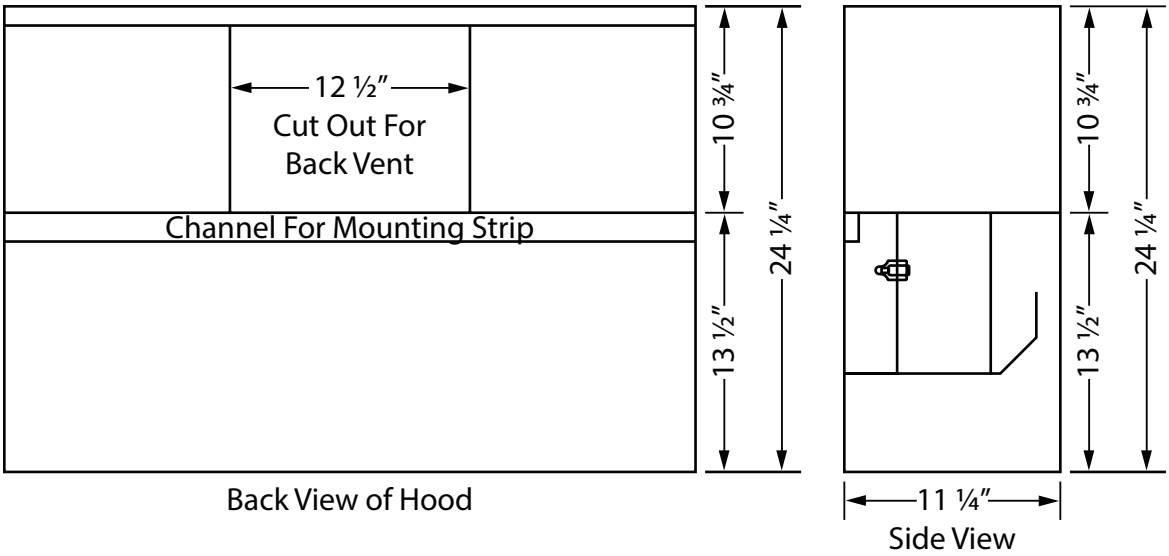

TLH WALL MOUNT HOOD VARIATIONS			
SPECIAL WIDTH (LESS THAN 48")		***CUSTOM TILT OUT***	
ADD	428	HEIGHT (36" MAX), WIDTH, DEPTH OR COMBO VARIATION ADD	876
HINGE AT TOP		***CUSTOM COLOR (SEE CUSTOM COLOR CHART)***	
ADD	428	ADD	1340

THE INFORMATION IN THIS DOCUMENT IS SUBJECT TO CHANGE AT ANY TIME WITHOUT NOTICE.

ISLAND LINER INSERTS

REC. MOUNTING HEIGHT FROM COOKING SURFACE: 30"	***550 CFM MODELS: VP565 TRANSITION INCLUDED*** ***1100 CFM MODELS: VP564 TRANSITION INCLUDED***

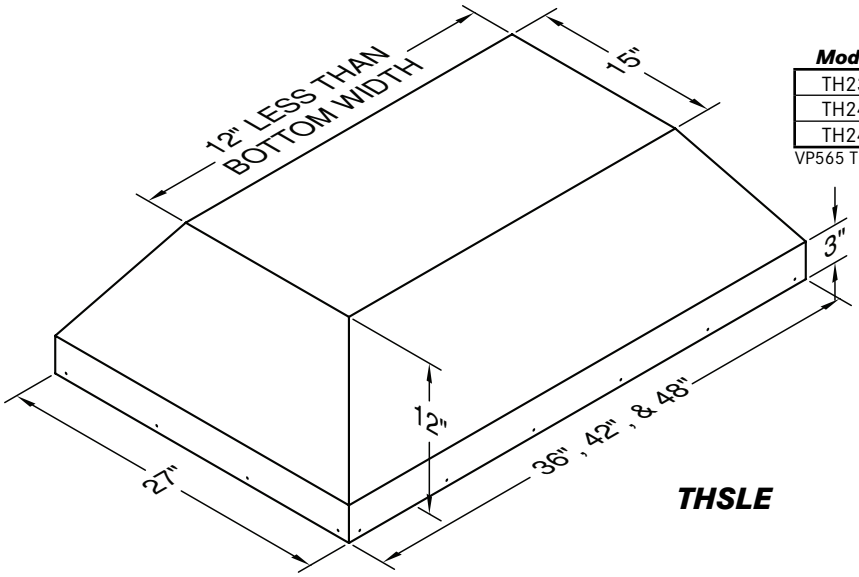

THSLE

Model No.	CFM	Width	Painted	Stainless	# Lts
TH236SLE	550	36"	3,867	4,819	4
TH242SLE		42"	3,954	4,956	4
TH248SLE		48"	4,041	5,046	4

VP565 TRANSITION TO 8" ROUND INCLUDED.

THSLE

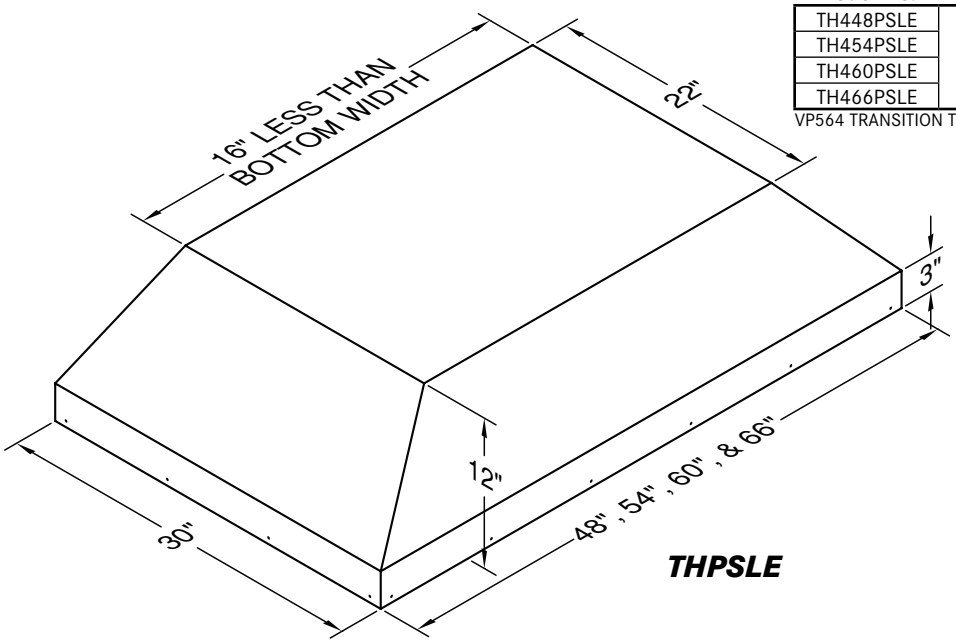

THPSLE

Model No.	CFM	Width	Painted	Stainless	# Lts
TH448PSLE	1100	48"	6,385	8,702	4
TH454PSLE		54"	6,643	9,028	4
TH460PSLE		60"	6,789	9,338	4
TH466PSLE		66"	6,892	9,526	4

VP564 TRANSITION TO 12" ROUND INCLUDED.

THPSLE

THE INFORMATION IN THIS DOCUMENT IS SUBJECT TO CHANGE AT ANY TIME WITHOUT NOTICE.

CUSTOM WALL MOUNT LINER INSERTS

REC. MOUNTING HEIGHT FROM COOKING SURFACE: VARIES BY SIZE

900 CFM OPTIONAL TRANSITION TO 10" ROUND: VP562
1200 CFM OPTIONAL TRANSITION TO 12" ROUND: VP563

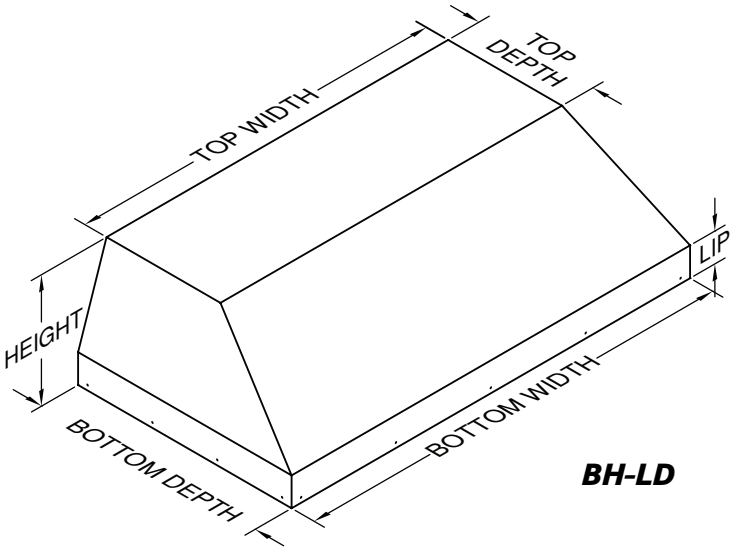

BH-LD

BH-LD

Model No.	CFM	Width	Painted	Stainless	# Lts
BH100LD-A	300	24"-36"	3,079	4,024	2
BH200LD-A	600	24"-36"	3,838	4,831	2
BH200LD-B		36"-48"	4,263	5,280	*
BH200LD-C		48"-54"	4,830	6,132	*
BH300LD-D	900	42"-54"	5,778	7,269	*
BH400LD-E	1200	48"-66"	7,055	8,787	*

2 LIGHTS FOR HOODS 24"<42", 3 LIGHTS FOR HOODS 42"<54", 4 LIGHTS FOR HOODS 54"≤66"

TRIM KIT INCLUDED DIMENSIONS BELOW ARE AVAILABLE AT NO ADDITIONAL COST.

BOTTOM DEPTH:	**16” - 24”**
HEIGHT:	**12”**
TOP DEPTH:	**12”**
LIP:	**3”**

MINIMUM TOP WIDTH FOR 300 SERIES IS 40-3/8”.
MINIMUM TOP WIDTH FOR 400 SERIES IS 46-3/8”

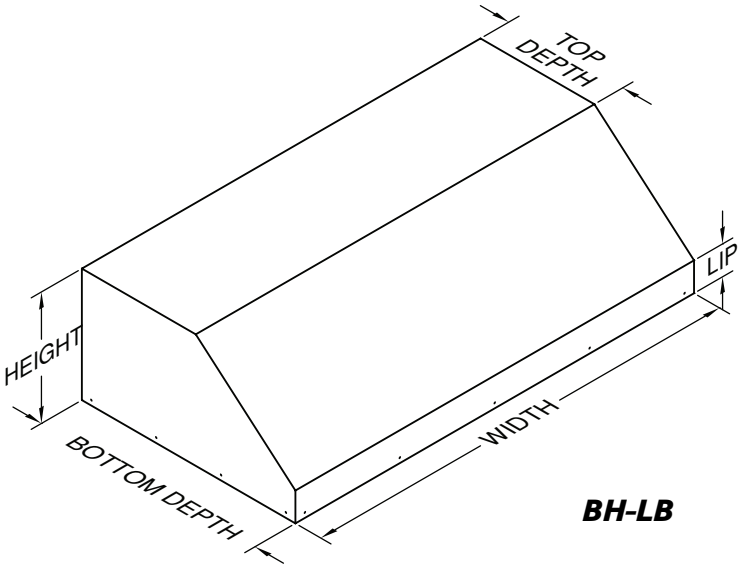

BH-LB

BH-LB

Model No.	CFM	Width	Painted	Stainless	# Lts
BH100LB-A	300	24"-36"	2,368	3,315	2
BH200LB-A	600	24"-36"	3,128	4,099	2
BH200LB-B		36"-48"	3,552	4,571	*
BH200LB-C		48"-54"	4,119	5,400	*
BH300LB-D	900	42"-54"	5,070	6,534	*
BH400LB-E	1200	48"-66"	6,345	8,076	*

2 LIGHTS FOR HOODS 24"<42", 3 LIGHTS FOR HOODS 42"<54", 4 LIGHTS FOR HOODS 54"≤66"

TRIM KIT INCLUDED DIMENSIONS BELOW ARE AVAILABLE AT NO ADDITIONAL COST.

BOTTOM DEPTH:	**16” - 24”**
HEIGHT:	**12”**
TOP DEPTH:	**12”**
LIP:	**3”**

CUSTOM WALL MOUNT LINER INSERT VARIATIONS

WIDTHS OVER 66"			***LIP (OTHER THAN 3" STANDARD)***	
	PAINTED	STAINLESS	ADD	734
FOR EACH 6" INCREMENT	332	477	***SPECIAL TOP DEPTH (12" MINIMUM)***	
PLUS	428		ADD	734
SPECIAL HEIGHT (OTHER THAN 12" STANDARD)			***ADDITIONAL BLOWERS & LIGHTS***	
9" MINIMUM, 18" MAXIMUM			SEE PAGE 50 FOR BLOWER OPTIONS	
ADD	734		***REMOTE BLOWER OPTIONS***	
DEPTH OVER 24"			SEE PAGES 50-51 FOR REMOTE BLOWER OPTIONS	
	PAINTED	STAINLESS	CUSTOM COLOR (SEE CUSTOM COLOR CHART)	
WIDTH X EXTRA DEPTH X	2.00	3.00	ADD	1340
PLUS	734		WARMING LAMPS AND SHELVES	
			SEE PAGES 53 FOR WARMING LAMP AND SHELF OPTIONS	

THE INFORMATION IN THIS DOCUMENT IS SUBJECT TO CHANGE AT ANY TIME WITHOUT NOTICE.

CUSTOM ISLAND LINER INSERTS

REC. MOUNTING HEIGHT FROM COOKING SURFACE: VARIES BY SIZE	***VP565 TRANSITION INCLUDED WITH EACH DUAL BLOWER*** ***VP564 TRANSITION INCLUDED WITH EACH CLUSTER BLOWER***

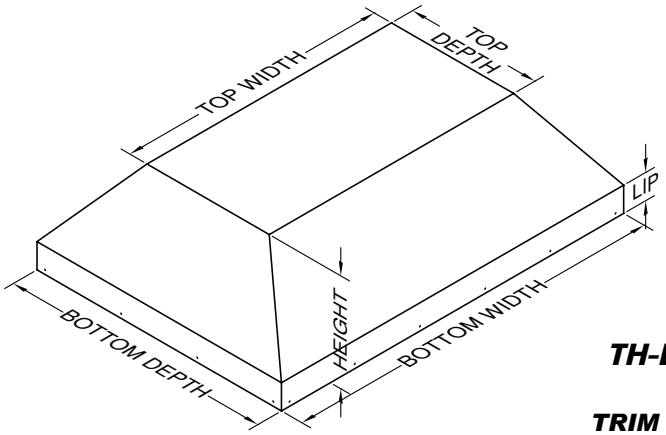

TH-LE

MODEL NO.	CFM •	Width	Painted	Stainless	# Lts
TH200LE-A	550	24"-36"	5,449	6,965	4
TH200LE-B		36"-48"	5,782	7,390	4
TH200LE-C		48"-54"	6,229	7,981	4
TH2+200LE-E	1100	48"-66"	8,964	11,412	*

EACH DUAL BLOWER REQUIRES 24" MINIMUM TOP WIDTH.
• VP565 TRANSITION TO 8" ROUND INCLUDED WITH EACH DUAL BLOWER.
4 LIGHTS FOR HOODS 48"<60", 8 LIGHTS FOR HOODS 60"≤66"
A CLUSTER BLOWER (1100 CFM) IS AVAILABLE ON MODELS WITH A MINIMUM TOP SIZE OF 24" WIDE X 24" DEEP. CONTACT THE FACTORY FOR ADDITIONAL DETAILS.

TH-LE

TRIM KIT INCLUDED
DIMENSIONS BELOW ARE AVAILABLE AT NO ADDITIONAL COST.

BOTTOM DEPTH:	**27”**
HEIGHT:	**12”**
TOP WIDTH:	**12” LESS THAN BOTTOM WIDTH**
TOP DEPTH:	**12” LESS THAN BOTTOM DEPTH**
LIP:	**3”**

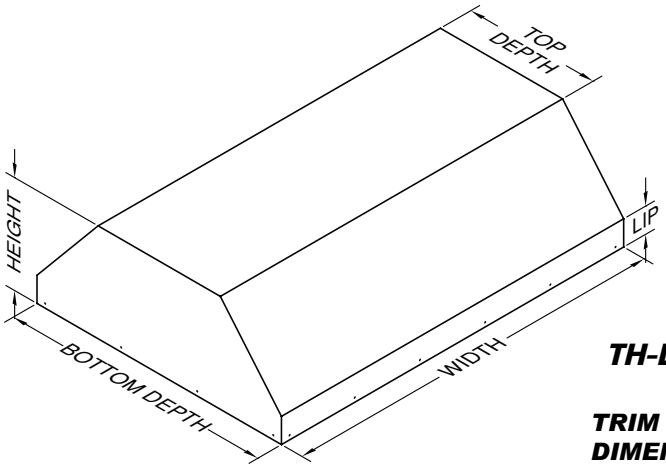

TH-LC

MODEL NO.	CFM •	Width	Painted	Stainless	# Lts
TH200LC-A	550	24"-36"	5,449	6,965	4
TH200LC-B		36"-48"	5,782	7,390	4
TH200LC-C		48"-54"	6,229	7,981	4
TH2+200LC-E	1100	48"-66"	8,964	11,412	*

EACH DUAL BLOWER REQUIRES 24" MINIMUM TOP WIDTH.
• VP565 TRANSITION TO 8" ROUND INCLUDED WITH EACH DUAL BLOWER.
4 LIGHTS FOR HOODS 48"<60", 8 LIGHTS FOR HOODS 60"≤66"
A CLUSTER BLOWER (1100 CFM) IS AVAILABLE ON MODELS WITH A MINIMUM TOP SIZE OF 24" WIDE X 24" DEEP. CONTACT THE FACTORY FOR ADDITIONAL DETAILS.

TH-LC

TRIM KIT INCLUDED
DIMENSIONS BELOW ARE AVAILABLE AT NO ADDITIONAL COST.

BOTTOM DEPTH:	**27”**
HEIGHT:	**12”**
TOP DEPTH:	**12” LESS THAN BOTTOM DEPTH**
LIP:	**3”**

CUSTOM ISLAND LINER INSERT VARIATIONS

	PAINTED	STAINLESS
WIDTHS OVER 66"		
FOR EACH 6" INCREMENT	332	477
PLUS	428	
DEPTH OVER 27"		
WIDTH X EXTRA DEPTH X	2.00	3.00
PLUS	734	
LIP (OTHER THAN 3" STANDARD)		
ADD	734	

SPECIAL HEIGHT (OTHER THAN 12" STANDARD)	
9" MINIMUM, 18" MAXIMUM	
ADD	734
SPECIAL TOP WIDTH OR DEPTH	
ADD	734
REMOTE BLOWER OPTIONS	
SEE PAGES 50-51 FOR REMOTE BLOWER OPTIONS	
CUSTOM COLOR (SEE CUSTOM COLOR CHART)	
ADD	1340

THE INFORMATION IN THIS DOCUMENT IS SUBJECT TO CHANGE AT ANY TIME WITHOUT NOTICE.

BLOWER OPTIONS

You may need to add a blower to hoods to increase CFM, depending on the cooking equipment being used. To add a blower to a hood, you need to have enough top space inside of the hood to do so. A Single Blower requires 16” of space, a Dual Blower requires 24” of space, an Island Dual Blower requires 12” D x 23 1/2” W, and an Island Cluster Blower requires 24” D x 24” W.

ADDING BLOWERS

Model	Volts	Amps	Hz	RPM	*CFM	**Equiv CFM	Painted	Stainless Steel
Single Blower	120	1.5	60	1550	300	450	733	905
Dual Blower	120	2.9	60	1550	600	900	1,422	1,658
Island Dual Blower	120	2.9	60	1550	550	900	1,464	1,874
Island Cluster Blower	120	5.8	60	1550	1100	1800	2,928	3,746
RM1000	120	3.2	60	1100	945	N/A	2,144	
RM1500	120	5.0	60	1130	1500	N/A	2,694	

SensaSource® - Our patented speed control system that allows the blower to be turned to half speed for light cooking but automatically returns to high speed when heat rise is detected. This feature is standard on all Magic Lung® and K Series models with halogen lighting.

SensaSource®	
Convert two-speed blower to auto-on SensaSource® control (one for each single or dual blower)	191 ea.

* CFM rating is based on 0.0” static pressure (resistance in the ducting turns, roof caps, etc.) CFM rating will change as static pressure is increased. Static pressure increases due to ducting and length of duct run.

** Equivalent CFM refers to the fact that the Magic Lung® uses centrifugal filtration units, while others use conventional filters. Apply this guideline when comparing blower units made by other manufacturers.

There are certain customers who will want a remote blower range hood despite the benefits of the Magic Lung blower system. The following steps will help you when pricing remote blower hoods.

1. Specify how many and which filters you will be using. B20 SS filters are for wall mount or under cabinet installations and T20 SS filters are for island installations. We recommend one B20 SS or T20 SS for each 22” of hood top width.
2. Specify the size and number of remote blowers you will need. The RM1000 is equivalent to a B200 or T200 blower. The RM1500 is 50% larger.
3. For each remote blower, you will need to add an accessory kit. The accessory kit includes a variable speed blower controller, LED lights, back draft dampers, and a 10” duct collar.

DEDUCTING BLOWERS FOR REMOTE BLOWER MODELS

BLOWER PRICING BELOW IS FOR USE IN CALCULATING DEDUCTIONS FOR REMOTE BLOWERS ONLY.

MODEL	PAINTED	STAINLESS
B100 (SINGLE BLOWER)	730	905
B200 (DUAL BLOWER)	1,421	1,658
T200 (ISLAND DUAL BLOWER)	1,464	1,872
T400 (ISLAND CLUSTER BLOWER)	2,928	3,746
SPECIAL COLLAR	446	

THE INFORMATION IN THIS DOCUMENT IS SUBJECT TO CHANGE AT ANY TIME WITHOUT NOTICE.

REMOTE BLOWERS

HOOD SELECTION/PRICING WITH REMOTE BLOWERS

1. CHOOSE THE BASE MODEL HOOD THAT IS TO BE EQUIPPED WITH A REMOTE BLOWER.
2. DEDUCT THE PRICE OF THE INTERNAL BLOWER(S) FROM THE HOOD (SEE PREVIOUS PAGE).
3. ADD THE APPROPRIATE ACCESSORY KIT (SEE RIGHT).
4. ADD THE APPROPRIATE FILTERS (SEE BELOW).
5. ADD THE APPROPRIATE REMOTE BLOWER UNIT(S) (SEE BELOW).

LIGHT KITS

INCLUDES LED LIGHTS, TWO-STAGE LIGHT SWITCH, SOLID STATE MOTOR CONTROL SWITCH (VARIABLE SPEED) AND 10” DAMPER ASSEMBLY INSTALLED IN HOOD.

ACC.KIT-W-H2 (2 LED LIGHTS/WALL MT)	1,042
ACC.KIT-W-H3 (3 LED LIGHTS/WALL MT)	1,321
ACC.KIT-W-H4 (4 LED LIGHTS/WALL MT)	1,601
ACC.KIT-I-H4 (4 LED LIGHTS/ISLAND)	2,172
ACC.KIT-I-H8 (8 LED LIGHTS/ISLAND)	3,260

ACCESSORY KIT PARTS

SOLID STATE (VARIABLE SPEED) MOTOR

CONTROL WALL SWITCH (P1500W) 161

ACCESSORY KIT PARTS

WHEN ORDERED WITH HOOD

TO ADD MOTOR CONTROL WALL SWITCH ASSEMBLY

ADD (P1500R) 40

WALL MOUNT BAFFLE FILTER

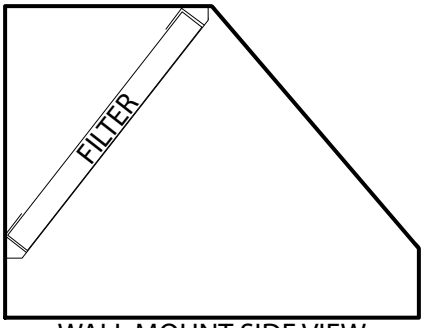

WALL MOUNT SIDE VIEW

B20 SS (PER FILTER) 713

(SPECIFY ONE B20 SS FOR EACH 22” OF HOOD TOP WIDTH)

ISLAND BAFFLE FILTER

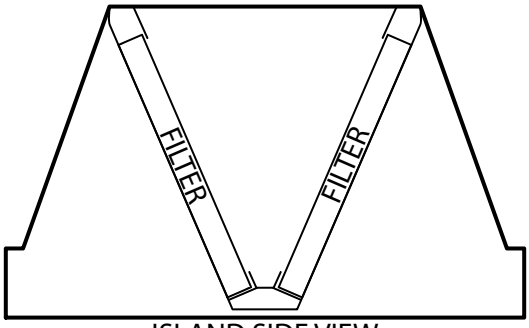

ISLAND SIDE VIEW

T20 SS (PER PAIR OF FILTERS) 1,472

(SPECIFY ONE PAIR OF T20 SS FOR EACH 22” OF HOOD TOP WIDTH)

REMOTE BLOWERS

RM1500

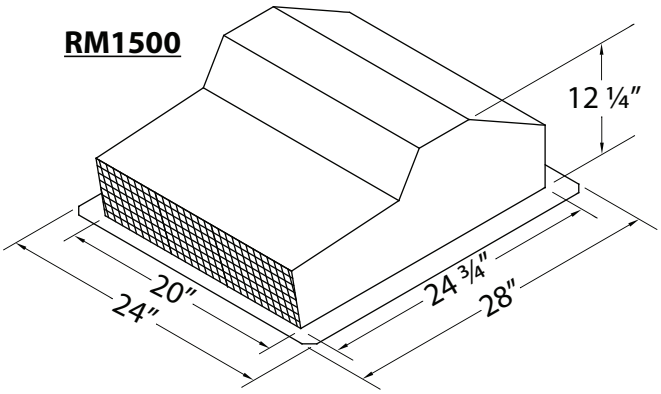

RM1500 REMOTE BLOWER 2,694

THE INFORMATION IN THIS DOCUMENT IS SUBJECT TO CHANGE AT ANY TIME WITHOUT NOTICE.

SPLASH PANELS

STANDARD SPLASH PANELS

Panel Size	Painted	Stainless	Overlay
30" W x 24" T	110	180	428
36" W x 24" T	130	214	512
42" W x 24" T	155	252	593
48" W x 24" T	168	287	688
30" W x 30" T	130	227	536
36" W x 30" T	155	275	641
42" W x 30" T	191	309	748
48" W x 30" T	214	356	854
SPECIAL SIZES (SPECIFY IF HEMS/HOLES REQUIRED)			
PER SQ INCH	0.50	0.50	1.00

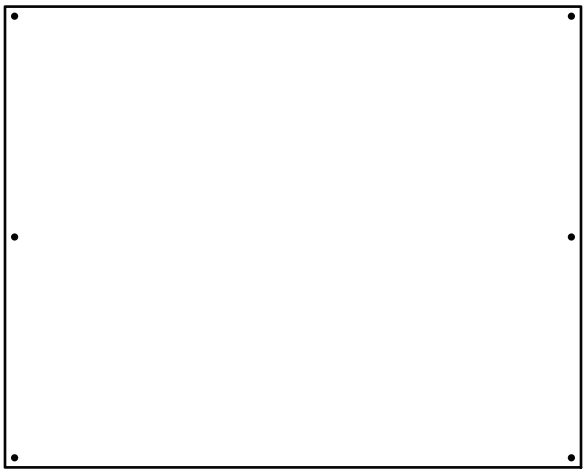

HEMS AND HOLES ARE INCLUDED ON STANDARD SIZES, PRICE AS A CUSTOM PANEL IF HEMS AND/OR HOLES ARE NOT REQUIRED.

OVERLAY & PATTERNED SPLASH PANELS

Panel Size	Painted	Stainless	Overlay
30" W x 24" T Pat.	193	239	398
36" W x 24" T Pat.	206	261	452
42" W x 24" T Pat.	224	284	504
48" W x 24" T Pat.	365	484	885
30" W x 30" T Pat.	206	269	467
36" W x 30" T Pat.	224	299	536
42" W x 30" T Pat.	244	322	604
48" W x 30" T Pat.	260	351	672
SPECIAL SIZES (SPECIFY IF HEMS/HOLES REQUIRED)			
PER SQ INCH	0.50	0.50	1.00
PLUS		197	

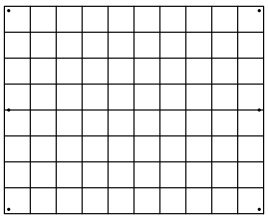

CHECKERBOARD

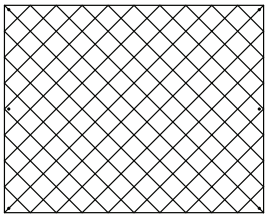

DIAMOND

HEMS AND HOLES ARE INCLUDED ON STANDARD SIZES, PRICE AS A CUSTOM PANEL IF HEMS AND/OR HOLES ARE NOT REQUIRED.

OTHER SPLASH PANEL OPTIONS

Ordering Notes and Options:

PAINTED SPLASH PANELS MUST HAVE AT LEAST ONE HOLE IN THEM TO ALLOW FOR PAINTING.	
FOR CUT-OUTS OR SPECIAL BREAKS, ADD	50
CRATING CHARGE FOR PANELS TOO LARGE TO PACKAGE WITH HOOD, ADD	85
MINIMUM CHARGE ON SMALL PANELS	50

THE INFORMATION IN THIS DOCUMENT IS SUBJECT TO CHANGE AT ANY TIME WITHOUT NOTICE.

WARMING LAMPS & SHELVES

WARMING BAR

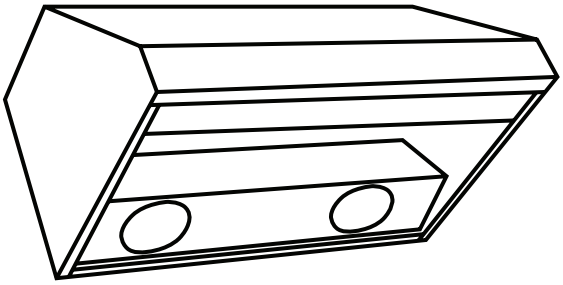

FOR USE IN HOODS 18” OR TALLER.
NOT AVAILABLE ON HOODS WITH DECKS BELOW 18”.
BULBS NOT INCLUDED.

Model No.		Price
WBAR	INCLUDES 2 LIGHTS	759
FOR ADDITIONAL LIGHTS, ADD		759
PLUS, PER LIGHT		456

WARMING LAMP HOUSING

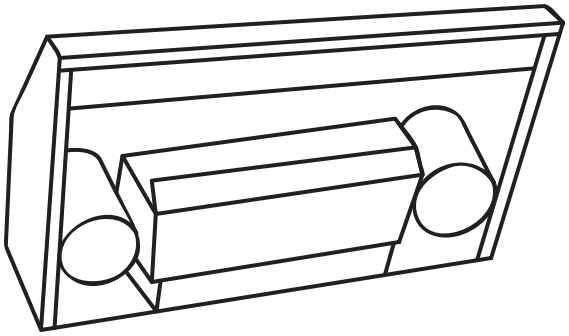

FOR USE IN HOODS UNDER 18” TALL.
8” TOP DIMENSION REQUIRED PER FIXTURE.
BULBS NOT INCLUDED.

Model No.	Price Per Light
WL-1	456

WARMING SHELF

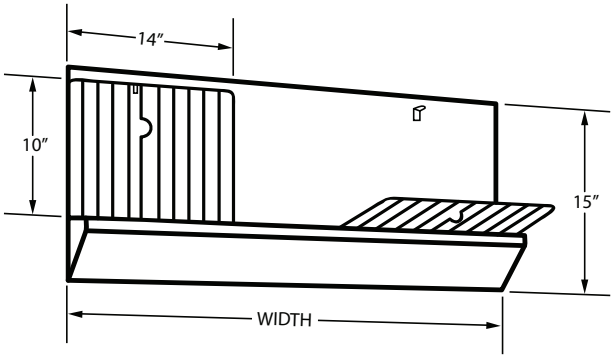

TWO FOLD DOWN SHELVES ON A BACKSPLASH.
MOUNTED ON A 3 1/2” DEEP LEDGE.
EACH SHELF IS 10” DEEP x 14” WIDE.
STAINLESS BACKSPLASH IS 15” TALL.

Model No.	Width	Price
WS030	30"	877
WS036	36"	959
WS042	42"	1031
WS048	48"	1129
WS054	54"	1199
WS060	60"	1279
WS066	66"	1354
WS072	72"	1444

Model No.	Description	Price
P1415	Additional Shelf	441

WS0 With Non-Standard Width	Price
USE NEXT LARGEST SIZE ON PRICE LIST PLUS	456

THE INFORMATION IN THIS DOCUMENT IS SUBJECT TO CHANGE AT ANY TIME WITHOUT NOTICE.

BBQ EXTENSION

Model No.	Width	Painted	Stainless
BBE30	30"	835	1169
BBE36	36"	873	1365
BBE42	42"	897	1497
BBE48	48"	935	1596
BBE54	54"	972	1719
BBE60	60"	1009	1832

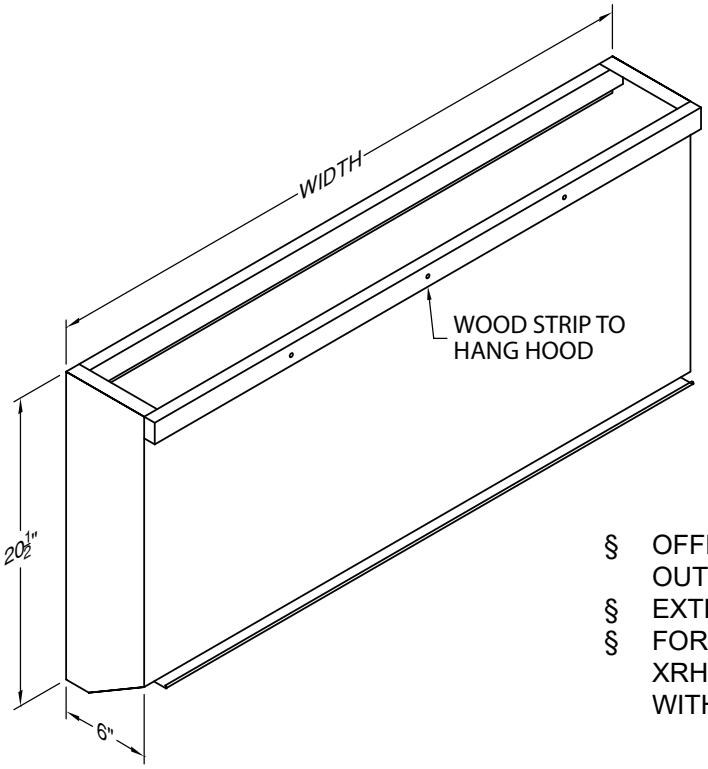

PRODUCT FEATURES

§ OFFERS MAXIMUM CANOPY EXPOSURE OVER OUTDOOR GRILL APPLICATIONS
§ EXTENDS PROJECTION TO 30” OR 33” DEEP
§ FOR USE WITH PRH18, PRXH18, NPH18, NPXH18, XRH18, OR XRXH18 MODELS WHEN NOT EQUIPPED WITH A WARMING BAR.

WR ACCESSORY RAIL

FOR USE WITH BBQ EXTENSION KIT.
AVAILABLE IS SS FINISH ONLY.

Model No.	Price
WR-30	227
WR-36	252
WR-42	252
WR-48	262
WR-54	262
WR-60	262

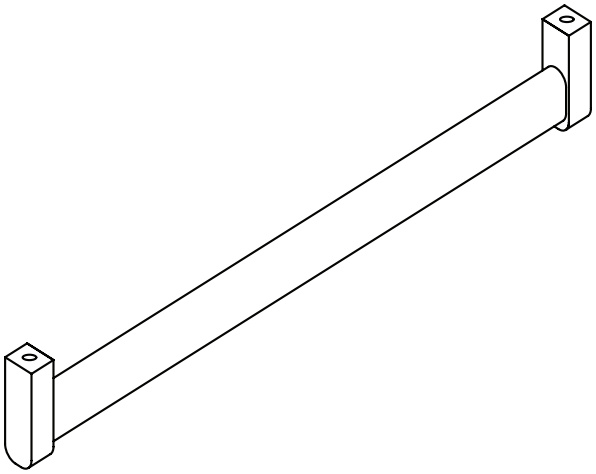

THE INFORMATION IN THIS DOCUMENT IS SUBJECT TO CHANGE AT ANY TIME WITHOUT NOTICE.

BANDS, FINISHES, & POT RAILS

VERTICAL BANDS

	18 GAUGE*
1/2" WIDE: EACH BAND (UP TO 30")	366
1" WIDE: EACH BAND (UP TO 30")	366
2" WIDE: EACH BAND (UP TO 30")	366
TALLER THAN 30", PER INCH PER BAND, ADD	12.00

* 18 GAUGE VERTICAL BANDS ARE ATTACHED WITH LAMINATE. 18 GAUGE VERTICAL BANDS CAN BE ATTACHED WITH 1/4" RIVETS, 1/2" RIVETS, 3/8" HEX NUTS, 1/2" HEX NUTS, OR 3/4" PYRAMID CLAVOS BY REQUEST.
HAMMERED COPPER MATERIAL IS THINNER THAN 18 GAUGE MATERIAL. ATTACHMENTS ARE REQUIRED FOR HAMMERED COPPER BANDS AND FOR BANDS ON HAMMERED COPPER HOODS.

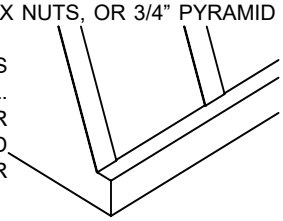

LIP TREATMENT (L/T)

18 GAUGE, PER INCH, ADD	12.00
1/8" THICK x 1" TALL SOLID BRASS, SOLID COPPER, OR BRUSHED SS PER INCH, ADD	13.00**
1/4" THICK x 1" TALL SOLID BRASS, SOLID COPPER, OR BRUSHED SS PER INCH, ADD	15.00**

* 18 GAUGE L/T IS ATTACHED WITH LAMINATE. 18 GAUGE L/T CAN BE ATTACHED WITH 1/4" RIVETS, 1/2" RIVETS, 3/8" HEX NUTS, 1/2" HEX NUTS, OR 3/4" PYRAMID CLAVOS BY REQUEST.
HAMMERED COPPER MATERIAL IS THINNER THAN 18 GAUGE MATERIAL. ATTACHMENTS ARE REQUIRED FOR LIP TREATMENT ON HAMMERED COPPER HOODS.
** ATTACHED WITH 1/2" RIVETS. CAN BE ATTACHED WITH LAMINATE BY REQUEST.

HEAVY VERTICAL BANDS

SOLID BRASS, SOLID COPPER, OR BRUSHED SS

1/8" THICK x 1" WIDE, EACH (UP TO 30")	399
TALLER THAN 30" PER INCH PER BAND, ADD	13.00
1/4" THICK x 1" WIDE, EACH (UP TO 30")	436
TALLER THAN 30", PER INCH PER BAND, ADD	15.00

1/8" THICK AND 1/4" THICK HEAVY VERTICAL BANDS ARE ATTACHED WITH 1/2" RIVETS. CAN BE ATTACHED WITH LAMINATE BY REQUEST.

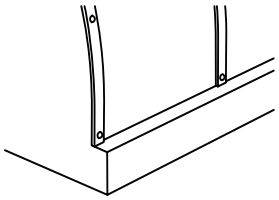

CORNER BANDS

CORNER BANDS FOR STRAIGHT EDGES*

1" x 1", EACH (UP TO 30")	647
2" x 2", EACH (UP TO 30")	647
TALLER THAN 30", PER INCH PER BAND, ADD	22.00

CORNER BANDS FOR CONVEX/CONCAVE EDGES+

1" x 1", EACH (UP TO 30")	1,293
2" x 2", EACH (UP TO 30")	1,293
TALLER THAN 30", PER INCH PER BAND, ADD	43.00

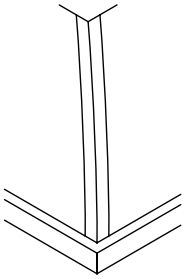

* ATTACHED WITH LAMINATE. CAN BE ATTACHED WITH 1/4" RIVETS, 1/2" RIVETS, 3/8" HEX NUTS, 1/2" HEX NUTS, OR 3/4" PYRAMID CLAVOS BY REQUEST.
+1" x 1" ATTACHED WITH 1/4" RIVETS. 2" x 2" ATTACHED WITH 1/2" RIVETS. CAN BE ATTACHED WITH 3/8" HEX NUTS, 1/2" HEX NUTS, OR 3/4" PYRAMID CLAVOS BY REQUEST.
AVAILABLE IN PAINTED FINISHES OR STAINLESS STEEL ONLY.
ALL CORNER BANDS ARE 18 GAUGE.

POT RAIL

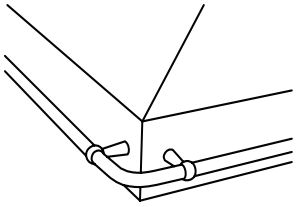

TUBULAR (5/8" DIAMETER)

BRASS, CHROME, OR COPPER: PER INCH*	19.00
ADDITIONAL HOOKS AVAILABLE IN SS, COPPER, OR BRASS P011: EACH	17.00

* For pot rail that is less than the overall width or depth of the hood, charge for full width or depth. Examples- A 24" deep hood with 3" of pot rail on a side is priced as 24" of pot rail. A 48" wide hood with 36" of pot rail on the front is priced as 48" of pot rail.

GALLEY RAIL

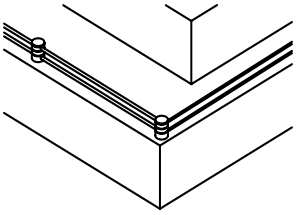

GALLEY RAIL

STAINLESS STEEL: PER INCH	15.00

FIXED RAIL

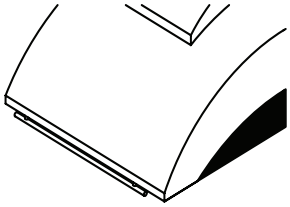

FIXED LENGTH SS RAIL (EACH)

PR21 SS (19.53")	217
PR24 SS (22.05")	250
PR27 SS (24.57")	270
PR30 SS (28.35")	326

COLORS

	STANDARD	SPECIAL	CUSTOM	ANTIQUE, SATIN, BRUSHED	ANTIQUE, BRUSHED, SATIN TRIM
	Biscuit (BT) Black Carbide (BC) Black Satin (BL) Gunsmoke (GS) White (WH)	Black River (BR) Copper Vein (CV) Oil Rubbed Bronze (ORB) Pewter (PTR) Rust (RT) Silver Vein (SV) Slate (SL)	RAL Paint Colors A custom color chart is available for custom colors.	Can be applied to: Brass/Copper Overlays **ARTISAN** Can be applied to: Stainless Steel Charge for *each* hood or duct cover.	Brass Bands & L/T Copper Bands & L/T **ARTISAN TRIM** SS Bands & L/T Charge once for all trim on a hood and duct cover assembly.
Color Charges: ADD	NO CHARGE	503	1,340	1,821	503

THE INFORMATION IN THIS DOCUMENT IS SUBJECT TO CHANGE AT ANY TIME WITHOUT NOTICE.

BAND & LIP TREATMENT ATTACHMENTS

1/4” RIVETS

3D View

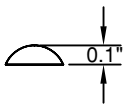

Side View

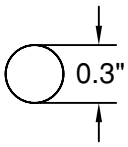

Top View

1/4” RIVETS ARE STANDARD ON 1” x 1” CONVEX/ CONCAVE CORNER BANDS.

1/4” RIVETS ARE OPTIONAL ON 18 GA. LIP TREATMENT, 18 GA. VERTICAL BANDS, AND STRAIGHT CORNER BANDS. ADDITIONAL CHARGES MAY APPLY.

1/4” RIVETS ARE AVAILABLE IN ALL BAND FINISHES (PAINTED TO MATCH).

1/2” RIVETS

3D View

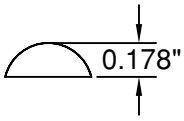

Side View

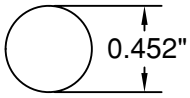

Top View

1/2” RIVETS ARE STANDARD ON 2” x 2” CONVEX/ CONCAVE CORNER BANDS AND ON HEAVY VERTICAL BANDS AND LIP TREATMENT.

1/2” RIVETS ARE OPTIONAL ON 18 GA. LIP TREATMENT, 18 GA. VERTICAL BANDS, AND STRAIGHT CORNER BANDS. ADDITIONAL CHARGES MAY APPLY.

1/2” RIVETS ARE AVAILABLE IN ALL BAND FINISHES (PAINTED TO MATCH).

3/8” HEX NUTS

3D View

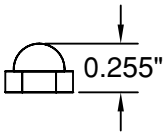

Side View

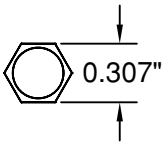

Top View

3/8” HEX NUTS ARE OPTIONAL ON 18 GA. LIP TREATMENT, 18 GA. VERTICAL BANDS, AND CORNER BANDS. ADDITIONAL CHARGES MAY APPLY.

3/8” HEX NUTS ARE AVAILABLE IN ALL BAND FINISHES (BRASS, STAINLESS STEEL, OR PAINTED TO MATCH).

1/2” HEX NUTS

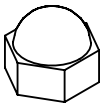

3D View

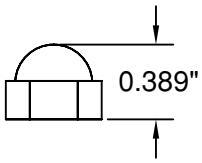

Side View

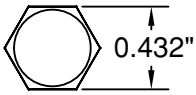

Top View

1/2” HEX NUTS ARE OPTIONAL ON 18 GA. LIP TREATMENT, 18 GA. VERTICAL BANDS, AND CORNER BANDS. ADDITIONAL CHARGES MAY APPLY.

1/2” HEX NUTS ARE AVAILABLE IN ALL BAND FINISHES (BRASS, STAINLESS STEEL, OR PAINTED TO MATCH).

3/4” PYRAMID CLAVOS

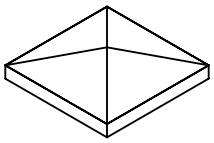

3D View

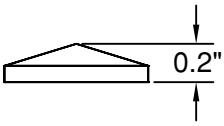

Side View

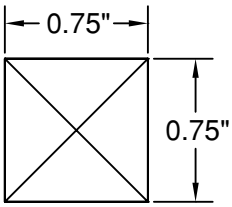

Top View

3/4” PYRAMID CLAVOS ARE OPTIONAL ON 18 GA. LIP TREATMENT, 18 GA. VERTICAL BANDS, AND CORNER BANDS. ADDITIONAL CHARGES MAY APPLY.

3/4” PYRAMID CLAVOS ARE AVAILABLE IN COPPER AND STAINLESS STEEL FINISHES.

3/4” PYRAMID CLAVOS CAN BE ROTATED 45 DEGREES FOR A MORE DECORATIVE APPEARANCE. NOTE: 3/4” PYRAMID CLAVOS ARE OVER 1” WIDE WHEN TURNED TO A 45 DEGREE “DIAMOND” ANGLE.

NOTE: SECTION TITLES ARE ROUNDED FOR CONVENIENCE PURPOSES AND DO NOT REPRESENT EXACT SIZES.

STANDARD BAND & LIP TREATMENT ATTACHMENT METHODS

BAND/LIP TREATMENT	STANDARD ATTACHMENT	ADDITIONAL ATTACHMENT OPTIONS
18 Ga. Vertical Band/Lip Treatment	Laminate	1/4” Rivets, 1/2 Rivets, 3/8” Hex Nuts, 1/2” Hex Nuts, and 3/4” Pyramid Clavos
1/8” x 1” Vertical Band/Lip Treatment	1/2” Rivets	Laminate
1/4” x 1” Vertical Band/Lip Treatment	1/2” Rivets	Laminate
Straight Corner Band	Laminate	1/4” Rivets, 1/2” Rivets, 3/8” Hex Nuts, 1/2” Hex Nuts, and 3/4” Pyramid Clavos
Convex or Concave Corner Band	1” x 1” - 1/4” Rivets, 2” x 2” - 1/2” Rivets	1/2” Rivets, 3/8” Hex Nuts, 1/2” Hex Nuts, and 3/4” Pyramid Clavos

Decorative attachments will be placed by the factory for best appearance. To specify locations, add per inch 12.00

THE INFORMATION IN THIS DOCUMENT IS SUBJECT TO CHANGE AT ANY TIME WITHOUT NOTICE.

DESIGNER SERIES HOOD TRIMS

THE INFORMATION IN THIS DOCUMENT IS SUBJECT TO CHANGE AT ANY TIME WITHOUT NOTICE.

DESIGNER SERIES HOOD TRIMS

THE INFORMATION IN THIS DOCUMENT IS SUBJECT TO CHANGE AT ANY TIME WITHOUT NOTICE.

Vent-A-Hood®

Power Lung Range Hoods

V-LINE UNDER CABINET & LINER INSERT

REC. MOUNTING HEIGHT FROM COOKING SURFACE: 21"-24"

OPTIONAL TRANSITION TO 7" ROUND: VP521

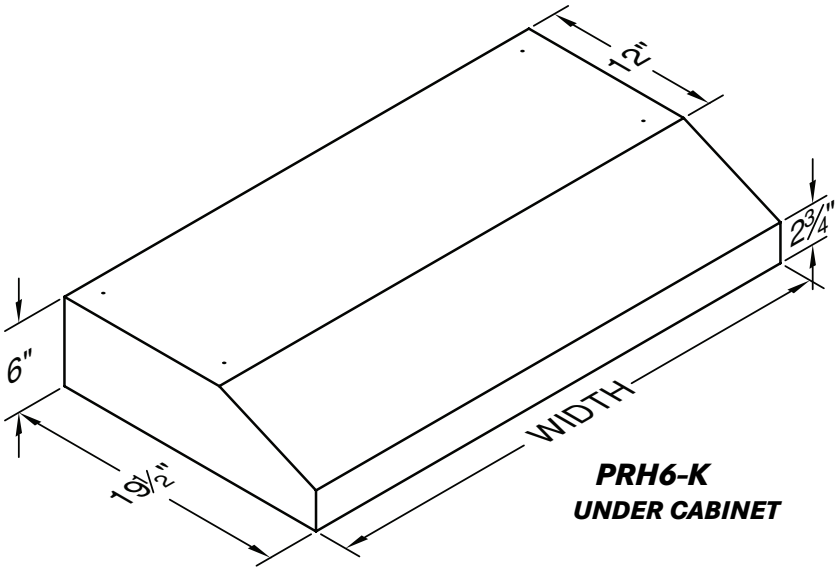

PRH6-K
UNDER CABINET

PRH6-K

Model No.	CFM	Width	Painted	Stainless	# Lts
PRH6-K24	250	24"	967	1,163	2
PRH6-K30		30"	967	1,163	2
PRH6-K36		36"	967	1,163	2
PRH6-K42		42"	1,135	1,407	3

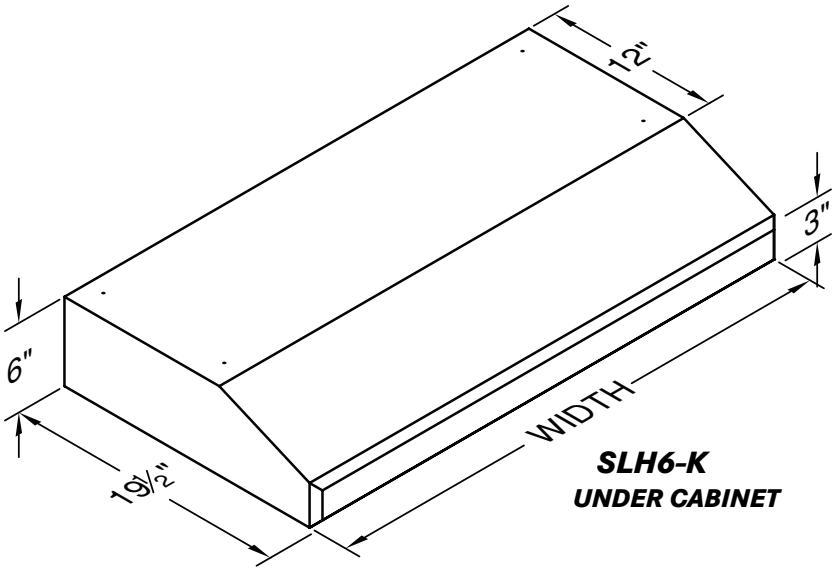

SLH6-K
UNDER CABINET

SLH6-K

Model No.	CFM	Width	Painted	Stainless	# Lts
SLH6-K24	250	24"	967	1,163	2
SLH6-K30		30"	967	1,163	2
SLH6-K36		36"	967	1,163	2
SLH6-K42		42"	1,135	1,407	3

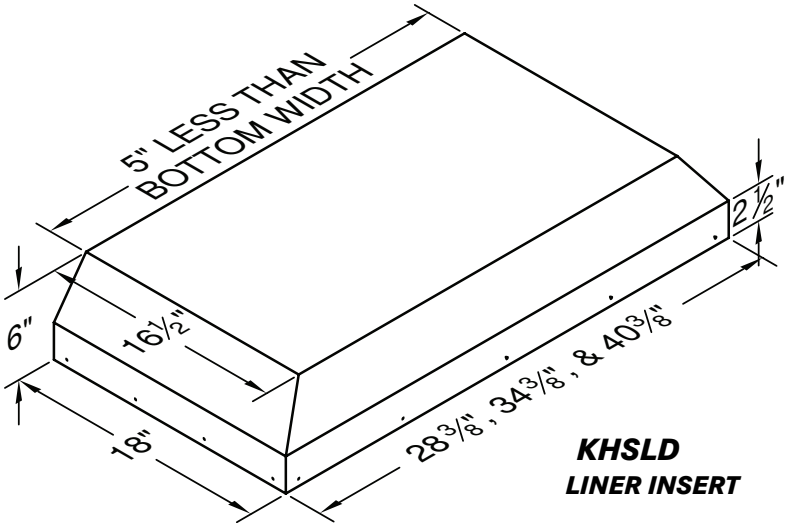

KHSLD
LINER INSERT

KHSLD

Model No.	CFM	Width	Painted	Stainless	# Lts
KH28SLD	250	28 3/8"	899	1,149	2
KH34SLD		34 3/8"	899	1,149	2
KH40SLD		40 3/8"	1,149	1,379	2

OPTIONAL TRIM KITS

Model No.	Width	Painted	Stainless
TKK28SLD	28-3/8"	40.00	40.00
TKK34SLD	34-3/8"	40.00	40.00
TKK40SLD	40-3/8"	42.00	42.00

THE INFORMATION IN THIS DOCUMENT IS SUBJECT TO CHANGE AT ANY TIME WITHOUT NOTICE.

V-LINE CONTEMPORARY WALL MOUNT & ISLAND

REC. MOUNTING HEIGHT FROM COOKING SURFACE:
CWEH6-K & GTH-K: 24", CIEH6-K: 30"

OPTIONAL TRANSITION TO 7" ROUND: VP521

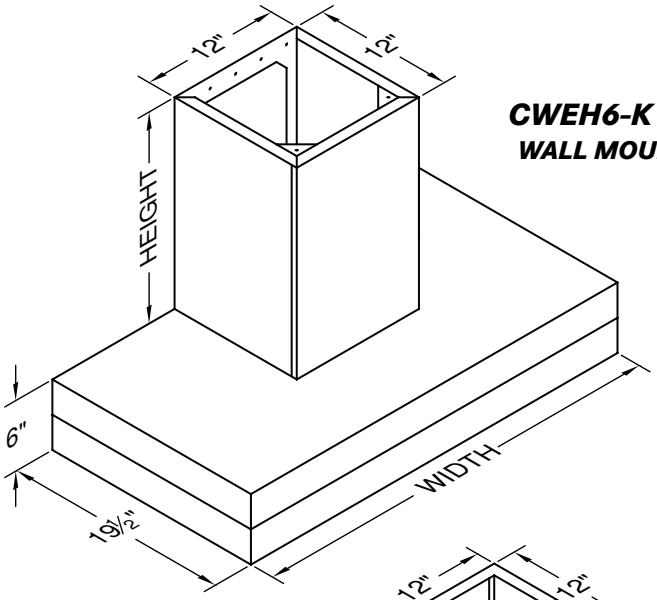

CWEH6-K
WALL MOUNT

SHOWN WITH MATCHING DUCT COVER (SOLD SEPARATELY)

CWEH6-K

Model No.	CFM	Width	Painted	Stainless	# Lts
CWEH6-K30	250	30"	1,740	2,211	2
CWEH6-K36		36"	1,740	2,211	2
CWEH6-K42		42"	2,032	2,586	3
CWEH6-K48		48"	2,132	2,686	3

DUCT COVERS FOR CWEH6-K

Model No.	Width	Height	Painted	Stainless	Ceiling
W6DCRND-12/18	12"	18"	859	969	7'
W6DCRND-12/30		30"	978	1,160	8'
W6DCRND-12/42		42"	1,096	1,351	9'
CUSTOM	WIDTH X HEIGHT X		1.00	1.50	
	PLUS		734		
FINISHED TOP	WIDTH X DEPTH X		1.00	1.50	
	PLUS		428		
SLOPED TOP•	ADD		734		

CEILING BASED ON REC. MAXIMUM HOOD MOUNTING HEIGHT.
• SPECIFY FRONT TO BACK OR LEFT TO RIGHT DIMENSIONS.

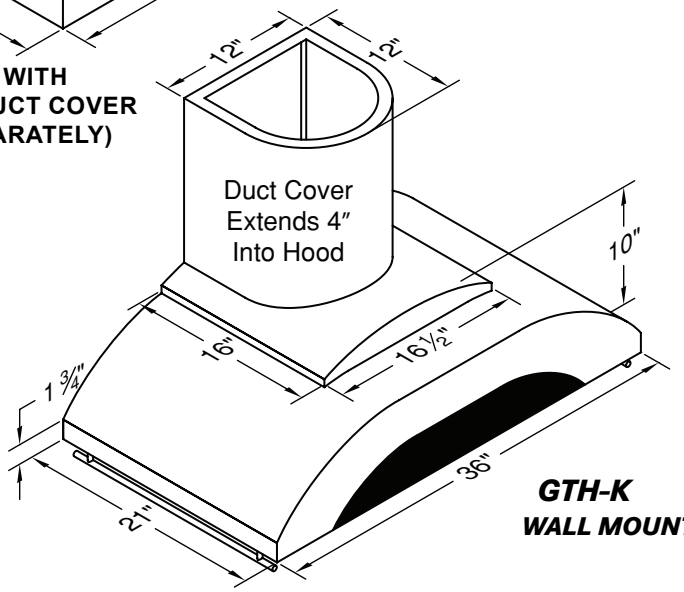

GTH-K
WALL MOUNT

GTH-K

Model No.	CFM	Width	Stainless	# Lts
GTH-K36	250	36"	2,132	2

DUCT COVERS FOR GTH-K

Model No.	Width	Height	Stainless	Ceiling
WGDC-12/18	12"	18"	1,043	7'
WGDC-12/30		30"	1,256	8'
WGDC-12/42		42"	1,469	9'
CUSTOM	WIDTH X HEIGHT X		1.50	
	PLUS		734	

CEILING BASED ON REC. MAXIMUM HOOD MOUNTING HEIGHT.

GTH-K VARIATIONS	
REMOVE FIXED LENGTH SS RAIL	
ADD	428

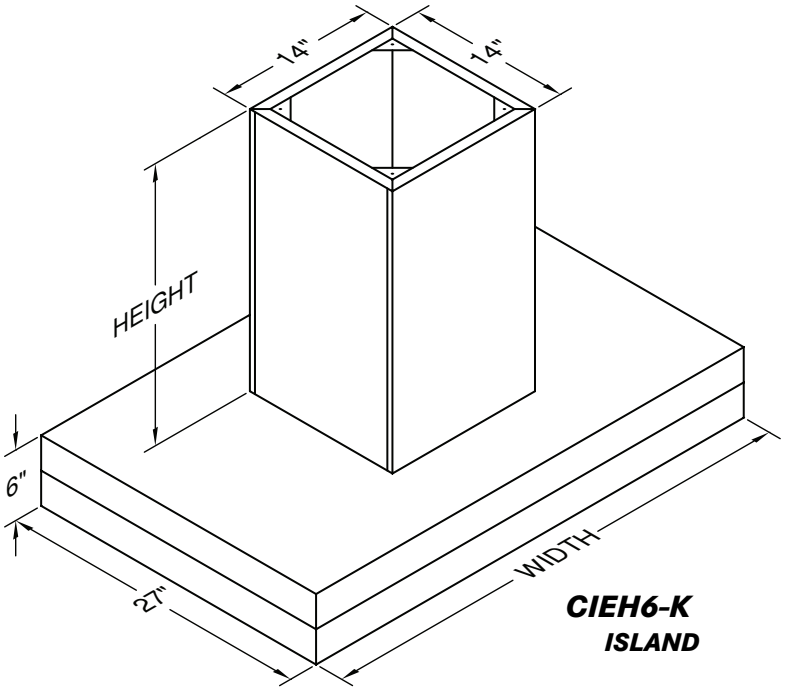

CIEH6-K
ISLAND

CIEH6-K

Model No.	CFM	Width	Painted	Stainless	# Lts
CIEH6-K36	250	36"	2,869	4,249	4
CIEH6-K42		42"	3,023	4,481	4

DUCT COVERS FOR CIEH6-K

Model No.	Width	Height	Painted	Stainless	Ceiling
IDCRND-14/24	14"	24"	1,070	1,195	8'
IDCRND-14/36		36"	1,256	1,445	9'
CUSTOM	WIDTH X HEIGHT X		1.00	2.00	
	PLUS		734		
SLOPED TOP•	ADD		734		

CEILING BASED ON REC. MAXIMUM HOOD MOUNTING HEIGHT.
• SPECIFY FRONT TO BACK OR LEFT TO RIGHT DIMENSIONS.

SHOWN WITH MATCHING DUCT COVER (SOLD SEPARATELY)

THE INFORMATION IN THIS DOCUMENT IS SUBJECT TO CHANGE AT ANY TIME WITHOUT NOTICE.

V-LINE EURO-STYLE WALL MOUNT

REC. MOUNTING HEIGHT FROM COOKING SURFACE: 24"

PDH7-K OPTIONAL TRANSITION TO 7" ROUND: VP521
PDH14-K: TRANSITION TO 7" ROUND INCLUDED

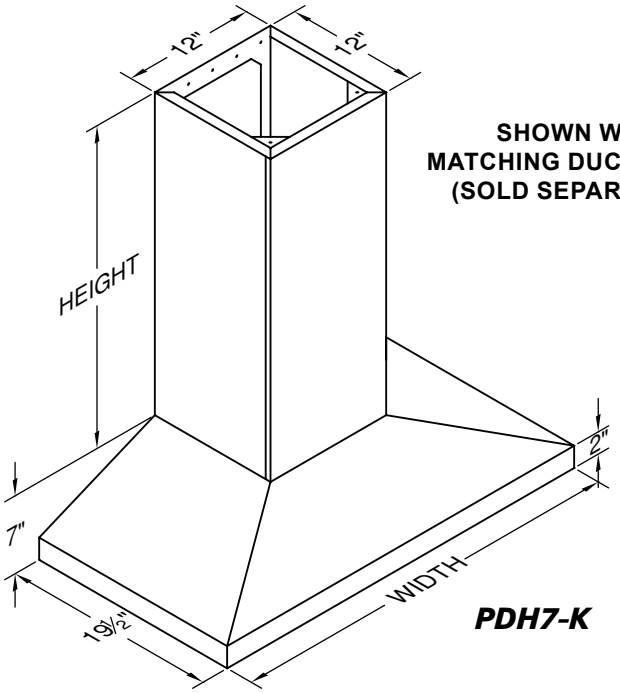

SHOWN WITH MATCHING DUCT COVER (SOLD SEPARATELY)

PDH7-K

PDH7-K

Model No.	CFM	Width	Painted	Stainless	# Lts
PDH7-K30	250	30"	1,740	2,211	2
PDH7-K36		36"	1,740	2,211	2

DUCT COVERS FOR PDH7-K

Model No.	Width	Height	Painted	Stainless	Ceiling
W7DCRND-12/17	12"	17"	852	949	7'
W7DCRND-12/29		29"	975	1,140	8'
W7DCRND-12/41		41"	1,093	1,330	9'
CUSTOM	WIDTH X HEIGHT X		1.00	1.50	
	PLUS		734		
FINISHED TOP	WIDTH X DEPTH X		1.00	1.50	
	PLUS		428		
SLOPED TOP•	ADD		734		

CEILING BASED ON REC. MAXIMUM HOOD MOUNTING HEIGHT.
•SPECIFY FRONT TO BACK OR LEFT TO RIGHT DIMENSIONS.

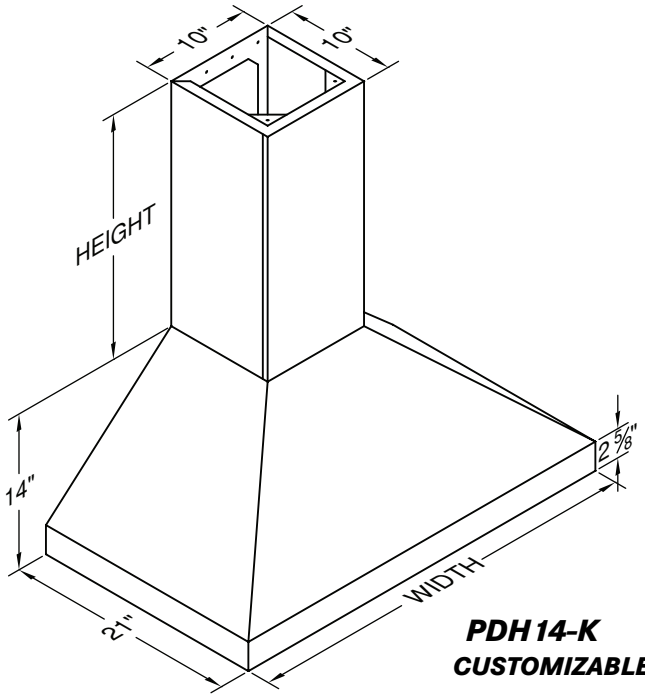

PDH14-K
CUSTOMIZABLE!

PDH14-K

Model No.	CFM	Width	Painted	Stainless	Overlay•	# Lts
PDH14-K30	250	30"	1,916	2,649	3,808	2
PDH14-K36		36"	1,955	2,709	3,951	2
PDH14-K42		42"	2,057	2,908	4,318	3
PDH14-K48		48"	2,152	3,015	4,543	3

•FOR OVERLAY HOODS, SPECIFY INTERIOR COLOR.
VP521 TRANSITION TO 7" ROUND INCLUDED.

DUCT COVERS FOR PDH14-K

Model No.	Width	Height	Painted	Stainless	Overlay	Ceiling
WDCRND-10/10	10"	10"	748	814	879	7'
WDCRND-10/22		22"	857	969	1,122	8'
WDCRND-10/34		34"	969	1,122	1,363	9'
CUSTOM	WIDTH X HEIGHT X		1.00	1.50	2.00	
	PLUS		734			
FINISHED TOP	WIDTH X DEPTH X		1.00	1.50	2.00	
	PLUS		369			
SLOPED TOP•	ADD		734			

CEILING BASED ON REC. MAXIMUM HOOD MOUNTING HEIGHT.
•SPECIFY FRONT TO BACK OR LEFT TO RIGHT DIMENSIONS.

SHOWN WITH MATCHING DUCT COVER (SOLD SEPARATELY)

PDH14-K EURO-STYLE WALL MOUNT HOOD VARIATIONS

SPECIAL WIDTH (LESS THAN 48")
USE NEXT LARGEST SIZE ON PRICE LIST,
PLUS 428

DEPTH OVER 21"

	PAINTED	STAINLESS	OVERLAY
WIDTH X EXTRA DEPTH X	2.00	3.00	4.00
PLUS		734	

STAINLESS STEEL INTERIOR ON OVERLAY HOOD
SUBTRACT PAINTED HOOD PRICE FROM STAINLESS HOOD PRICE

CUSTOM COLOR (SEE CUSTOM COLOR CHART)
ADD 1340

TRIM OPTIONS
SEE PAGES 56-57 FOR FINISH AND TRIM OPTIONS

THE INFORMATION IN THIS DOCUMENT IS SUBJECT TO CHANGE AT ANY TIME WITHOUT NOTICE.

ARS Duct Free Range Hoods

ARS DUCT FREE UNDER CABINET & LINER INSERT

REC. MOUNTING HEIGHT FROM COOKING SURFACE: 21"-24"	ARS FILTER KIT REQUIRED (SOLD SEPARATELY)

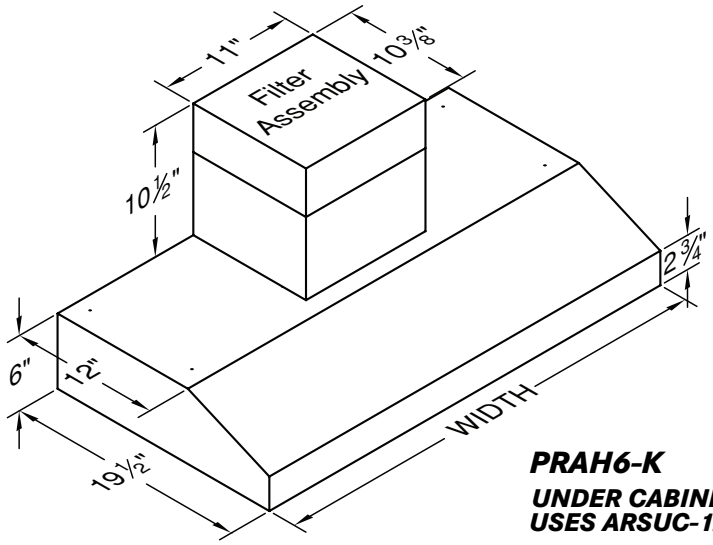

PRAH6-K
UNDER CABINET
USES ARSUC-12/10

PRAH6-K

Model No.	ARS Kit •	Width	Painted	Stainless	# Lts
PRAH6-K24	ARSUC-12/10	24"	986	1,185	2
PRAH6-K30		30"	986	1,185	2
PRAH6-K36		36"	986	1,185	2
PRAH6-K42		42"	1,157	1,433	3

• ARS KIT IS REQUIRED FOR INSTALLATION, SOLD SEPARATELY.

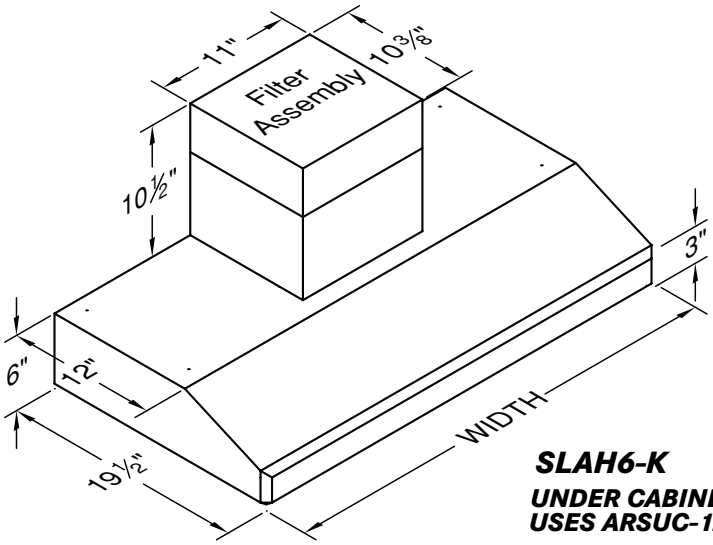

SLAH6-K
UNDER CABINET
USES ARSUC-12/10

SLAH6-K

Model No.	ARS Kit •	Width	Painted	Stainless	# Lts
SLAH6-K24	ARSUC-12/10	24"	986	1,185	2
SLAH6-K30		30"	986	1,185	2
SLAH6-K36		36"	986	1,185	2
SLAH6-K42		42"	1,157	1,433	3

• ARS KIT IS REQUIRED FOR INSTALLATION, SOLD SEPARATELY.

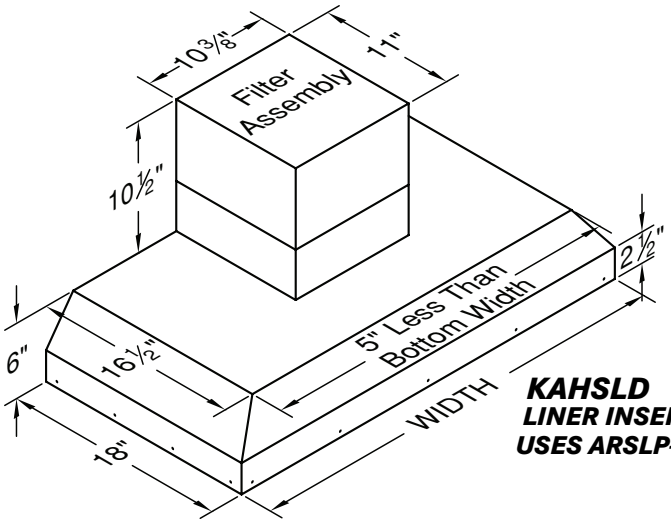

KAHSLD
LINER INSERT
USES ARSLP-12/10

KAHSLD

Model No.	ARS Kit •	Width	Painted	Stainless	# Lts
KAH28SLD	ARSLP-12/10	28 3/8"	883	1,079	2
KAH34SLD		34 3/8"	883	1,079	2
KAH40SLD		40 3/8"	1,048	1,264	2

• ARS KIT IS REQUIRED FOR INSTALLATION, SOLD SEPARATELY.

OPTIONAL TRIM KITS

Model No.	Width	Painted	Stainless
TKK28SLD	28-3/8"	40.00	40.00
TKK34SLD	34-3/8"	40.00	40.00
TKK40SLD	40-3/8"	42.00	42.00

ARS FILTER KITS

Model No.	Description	Price
ARSLP-12/10	ARS Filter Assembly - Low Profile (Replaces ARSLP-12)	501
ARSUC-12/10	ARS Filter Assembly - Under Cabinet (Replaces ARSUC-12)	501

ARS FILTER REPLACEMENT PARTS

Model No.	Description	Price
PARS-12/10	H.E. Filter Assembly (Replaces PARS-12)	380
PARS-C	Replacement Activated Carbon Pellets	121

THE H.E. FILTER ASSEMBLY AND ACTIVATED CARBON MEDIA SHOULD BE CHANGED AS NEEDED BASED ON USAGE.

THE INFORMATION IN THIS DOCUMENT IS SUBJECT TO CHANGE AT ANY TIME WITHOUT NOTICE.

ARS DUCT FREE CONTEMPORARY WALL MOUNT & ISLAND

REC. MOUNTING HEIGHT FROM COOKING SURFACE:
CWEAH6-K: 21"-24", CIEAH6-K: 30"

ARS FILTER KIT REQUIRED
(SOLD SEPARATELY)

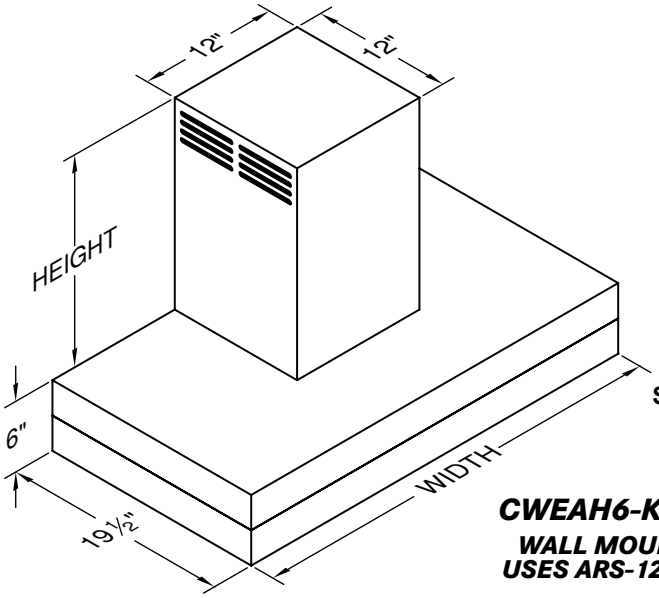

SHOWN WITH MATCHING DUCT COVER AND ARS-12/10 FILTER KIT (SOLD SEPARATELY)

CWEAH6-K
WALL MOUNT
USES ARS-12/10

CWEAH6-K

Model No.	ARS Kit •	Width	Painted	Stainless	# Lts
CWEAH6-K30	ARS-12/10	30"	1,618	2,048	2
CWEAH6-K36		36"	1,618	2,048	2
CWEAH6-K42		42"	1,874	2,391	3
CWEAH6-K48		48"	1,962	2,453	3

• ARS KIT IS REQUIRED FOR INSTALLATION, SOLD SEPARATELY.

DUCT COVERS FOR CWEAH6-K

Model No.	Width	Height	Painted	Stainless	Ceiling
W6DCAND-12/18	12"	18"	1,122	1,208	7'
W6DCAND-12/30		30"	1,230	1,383	8'
W6DCAND-12/42		42"	1,340	1,539	9'

CEILING BASED ON REC. MAXIMUM HOOD MOUNTING HEIGHT.

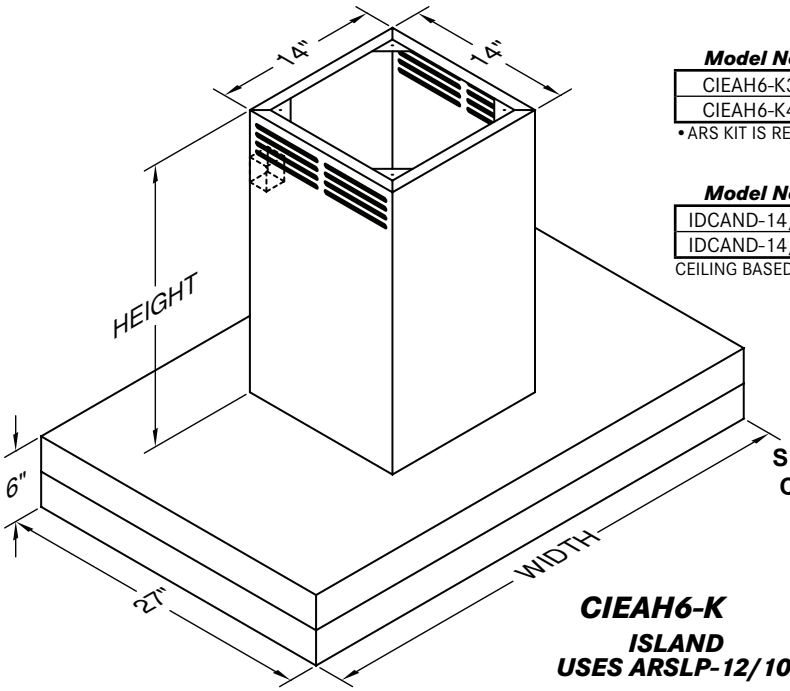

SHOWN WITH MATCHING DUCT COVER AND ARSLP-12 FILTER KIT (SOLD SEPARATELY)

CIEAH6-K
ISLAND
USES ARSLP-12/10

CIEAH6-K

Model No.	ARS Kit •	Width	Painted	Stainless	# Lts
CIEAH6-K36	ARSLP-12/10	36"	2,925	3,898	4
CIEAH6-K42		42"	3,080	4,109	4

• ARS KIT IS REQUIRED FOR INSTALLATION, SOLD SEPARATELY.

DUCT COVERS FOR CIEAH6-K

Model No.	Width	Height	Painted	Stainless	Ceiling
IDCAND-14/24	14"	24"	1,299	1,428	8'
IDCAND-14/36		36"	1,487	1,677	9'

CEILING BASED ON REC. MAXIMUM HOOD MOUNTING HEIGHT.

ARS FILTER KITS

Model No.	Description	Price
ARS-12/10	ARS Filter Assembly for CWEAH6-K (Replaces ARS-12)	800
ARSLP-12/10	ARS Filter Assembly - Low Profile (Replaces ARSLP-12)	501

ARS FILTER REPLACEMENT PARTS

Model No.	Description	Price
PARS-12/10	H.E. Filter Assembly (Replaces PARS-12)	380
PARS-C	Replacement Activated Carbon Pellets	121

THE H.E. FILTER ASSEMBLY AND ACTIVATED CARBON MEDIA SHOULD BE CHANGED AS NEEDED BASED ON USAGE.

THE INFORMATION IN THIS DOCUMENT IS SUBJECT TO CHANGE AT ANY TIME WITHOUT NOTICE.

ARS DUCT FREE EURO-STYLE WALL MOUNT

REC. MOUNTING HEIGHT FROM COOKING SURFACE: 24"	ARS FILTER KIT REQUIRED (SOLD SEPARATELY)

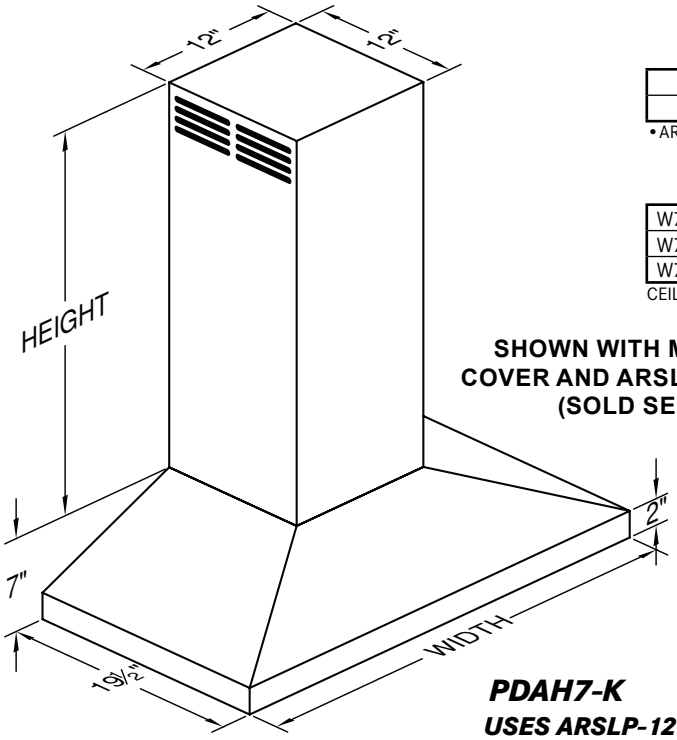

SHOWN WITH MATCHING DUCT COVER AND ARSLP-12/10 FILTER KIT (SOLD SEPARATELY)

PDAH7-K
USES ARSLP-12

PDAH7-K

Model No.	ARS Kit •	Width	Painted	Stainless	# Lts
PDAH7-K30	ARSLP-12/10	30"	1,840	2,338	2
PDAH7-K36		36"	1,840	2,338	2

• ARS KIT IS REQUIRED FOR INSTALLATION, SOLD SEPARATELY.

DUCT COVERS FOR PDAH7-K

Model No.	Width	Height	Painted	Stainless	Ceiling
W7DCAND-12/17	12"	17"	1,112	1,195	7'
W7DCAND-12/29		29"	1,220	1,371	8'
W7DCAND-12/41		41"	1,332	1,525	9'

CEILING BASED ON REC. MAXIMUM HOOD MOUNTING HEIGHT.

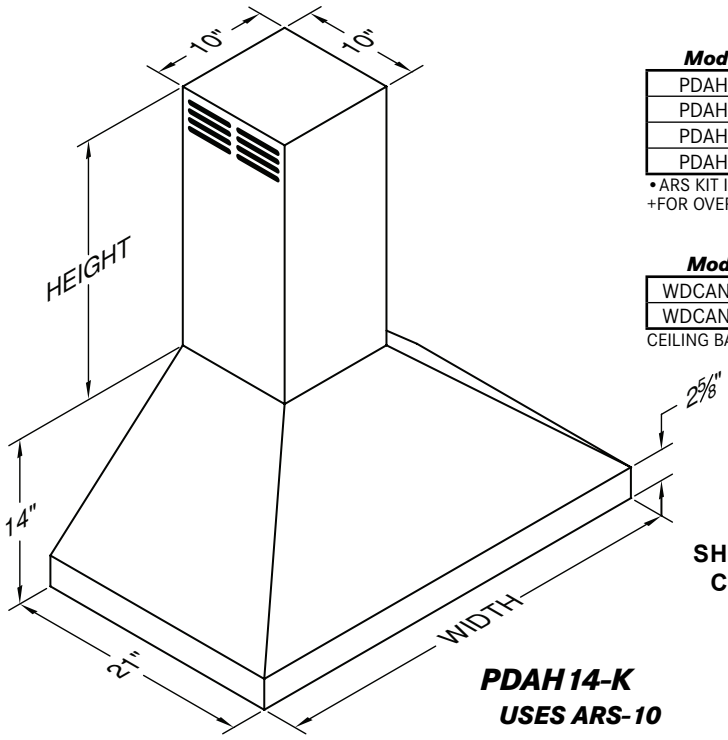

SHOWN WITH MATCHING DUCT COVER AND ARS FILTER KIT (SOLD SEPARATELY)

PDAH14-K
USES ARS-10

PDAH14-K

Model No.	ARS Kit •	Width	Painted	Stainless	Overlay+	# Lts
PDAH14-K30	ARS-10	30"	2,026	2,799	4,026	2
PDAH14-K36		36"	2,066	2,863	4,176	2
PDAH14-K42		42"	2,174	3,074	4,564	3
PDAH14-K48		48"	2,276	3,187	4,802	3

• ARS KIT IS REQUIRED FOR INSTALLATION, SOLD SEPARATELY.
+FOR OVERLAY HOODS, SPECIFY INTERIOR COLOR.

DUCT COVERS FOR PDAH14-K

Model No	Width	Height	Painted	Stainless	Overlay	Ceiling
WDCAND-10/22	10"	22"	1,122	1,230	1,363	8'
WDCAND-10/34		34"	1,208	1,363	1,585	9'

CEILING BASED ON REC. MAXIMUM HOOD MOUNTING HEIGHT.

ARS FILTER KITS

Model No.	Description	Price
ARS-10	ARS Filter Assembly for PDAH14-K	800
ARSLP-12/10	ARS Filter Assembly - Low Profile (Replaces ARSLP-12)	501

ARS FILTER REPLACEMENT PARTS

Model No.	Description	Price
PARS-12/10	H.E. Filter Assembly (Replaces PARS-12)	380
PARS-C	Replacement Activated Carbon Pellets	121
THE H.E. FILTER ASSEMBLY AND ACTIVATED CARBON MEDIA SHOULD BE CHANGED AS NEEDED BASED ON USAGE.		

THE INFORMATION IN THIS DOCUMENT IS SUBJECT TO CHANGE AT ANY TIME WITHOUT NOTICE.

ARS DUCT FREE EURO-STYLE ISLAND

REC. MOUNTING HEIGHT FROM COOKING SURFACE: 30"	ARS FILTER KIT REQUIRED (SOLD SEPARATELY)

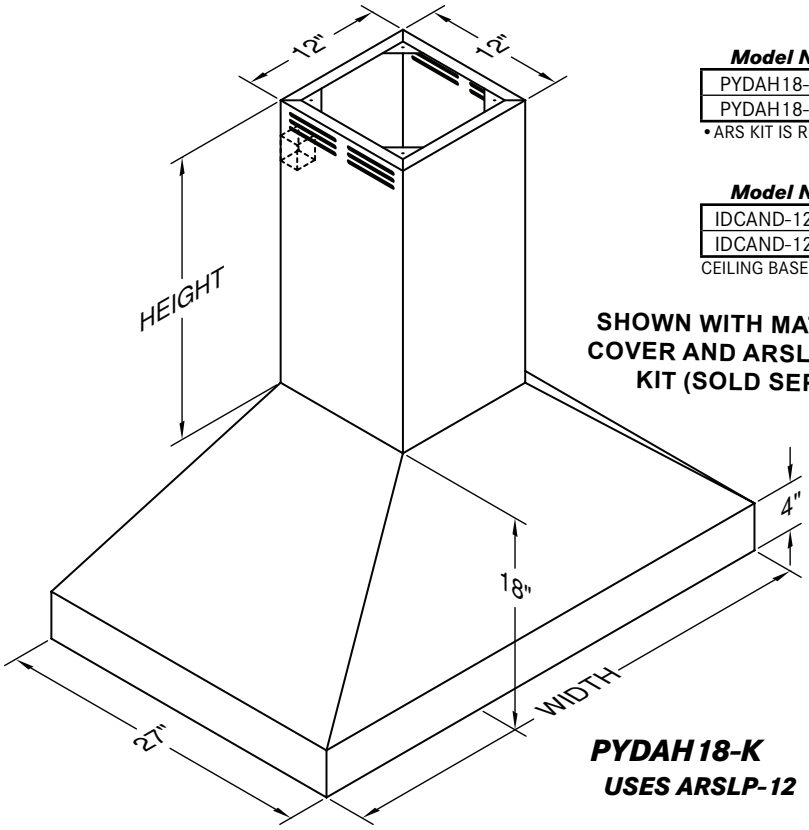

SHOWN WITH MATCHING DUCT COVER AND ARSLP-12/10 FILTER KIT (SOLD SEPARATELY)

PYDAH 18-K
USES ARSLP-12

PYDAH 18-K

Model No.	ARS Kit •	Width	Painted	Stainless	# Lts
PYDAH18-K36	ARSLP-12/10	36"	4,822	6,562	4
PYDAH18-K42		42"	5,029	6,839	4

• ARS KIT IS REQUIRED FOR INSTALLATION, SOLD SEPARATELY.

DUCT COVERS FOR PYDAH 18-K

Model No.	Width	Height	Painted	Stainless	Ceiling
IDCAND-12/24	12"	24"	1,253	1,411	9'
IDCAND-12/36		36"	1,366	1,568	10'

CEILING BASED ON REC. MAXIMUM HOOD MOUNTING HEIGHT.

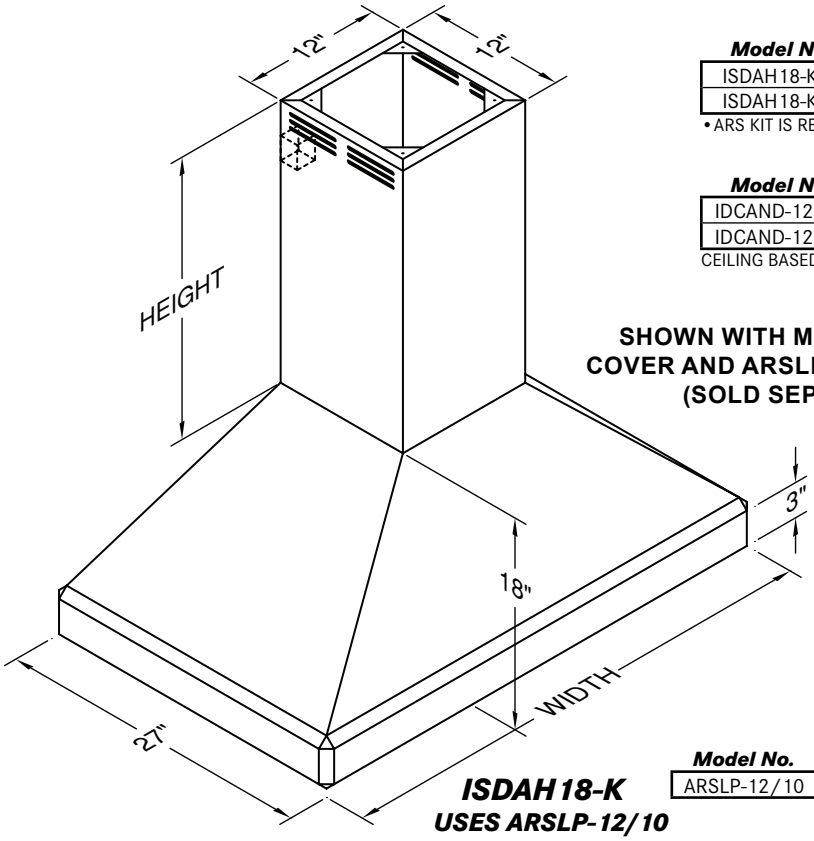

SHOWN WITH MATCHING DUCT COVER AND ARSLP-12/10 FILTER KIT (SOLD SEPARATELY)

ISDAH 18-K
USES ARSLP-12/10

ISDAH 18-K

Model No.	ARS Kit •	Width	Painted	Stainless	# Lts
ISDAH18-K36	ARSLP-12/10	36"	5,712	7,502	4
ISDAH18-K42		42"	5,915	7,778	4

• ARS KIT IS REQUIRED FOR INSTALLATION, SOLD SEPARATELY.

DUCT COVERS FOR ISDAH 18-K

Model No.	Width	Height	Painted	Stainless	Ceiling
IDCAND-12/24	12"	24"	1,253	1,411	9'
IDCAND-12/36		36"	1,366	1,568	10'

CEILING BASED ON REC. MAXIMUM HOOD MOUNTING HEIGHT.

ARS FILTER KITS

Model No.	Description	Price
ARSLP-12/10	ARS Filter Assembly - Low Profile (Replaces ARSLP-12)	501

ARS FILTER REPLACEMENT PARTS

Model No.	Description	Price
PARS-12/10	H.E. Filter Assembly (Replaces PARS-12)	380
PARS-C	Replacement Activated Carbon Pellets	121

THE H.E. FILTER ASSEMBLY AND ACTIVATED CARBON MEDIA SHOULD BE CHANGED AS NEEDED BASED ON USAGE.

THE INFORMATION IN THIS DOCUMENT IS SUBJECT TO CHANGE AT ANY TIME WITHOUT NOTICE.

M Series Range Hoods

M SERIES WALL MOUNT

REC. MOUNTING HEIGHT FROM COOKING SURFACE: 30"

BLOWER ASSEMBLY REQUIRED (SOLD SEPARATELY)

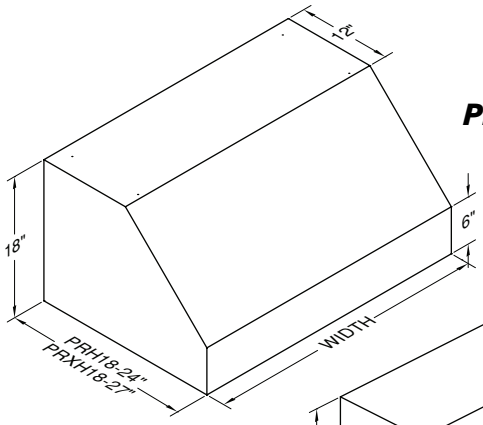

PRH18-M

PRH18-M/PRXH18-M

Model No.	Width	Price	# Lts	Filters
PRH18-M30 SS	30"	2,165	2	2
PRH18-M36 SS	36"	2,203	2	2
PRH18-M42 SS	42"	2,381	2	2
PRH18-M48 SS	48"	2,513	3	3
PRH18-M54 SS	54"	3,072	4	3
PRH18-M60 SS	60"	3,335	4	4
PRH18-M66 SS	66"	3,562	4	4

FOR 27" DEEP MODEL, ORDER PRXH18-M (NO ADDITIONAL COST)
BLOWER SOLD SEPARATELY
STAINLESS STEEL BAFFLE FILTERS AND GU10 LIGHTING INCLUDED.

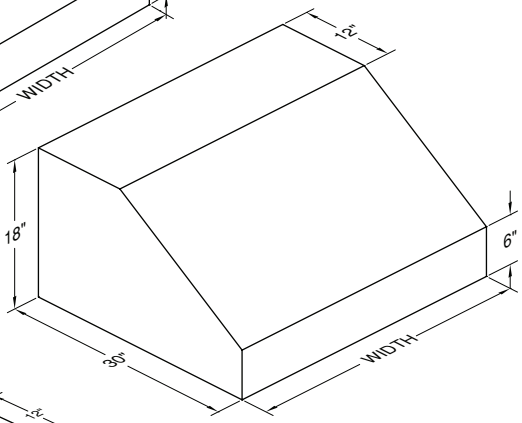

PRH18-M 30D

PRH18-M 30"D

Model No.	Width	Price	# Lts	Filters
PRH18-M36x30 SS	36"	3,257	2	2
PRH18-M42x30 SS	42"	3,583	2	2
PRH18-M48x30 SS	48"	3,827	3	3
PRH18-M54x30 SS	54"	4,509	4	3

BLOWER SOLD SEPARATELY

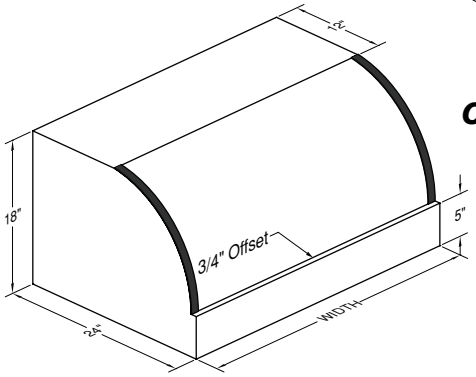

CXH18-M

CXH18-M

Model No.	Width	Price	# Lts	Filters
CXH18-M30 SS	30"	2,767	2	2
CXH18-M36 SS	36"	2,804	2	2
CXH18-M42 SS	42"	2,993	2	2
CXH18-M48 SS	48"	3,219	3	3
CXH18-M54 SS	54"	3,721	4	3
CXH18-M60 SS	60"	4,003	4	4
CXH18-M66 SS	66"	4,356	4	4

BLOWER SOLD SEPARATELY
STAINLESS STEEL BAFFLE FILTERS AND GU10 LIGHTING INCLUDED.
1" STAINLESS STEEL BANDS INCLUDED.

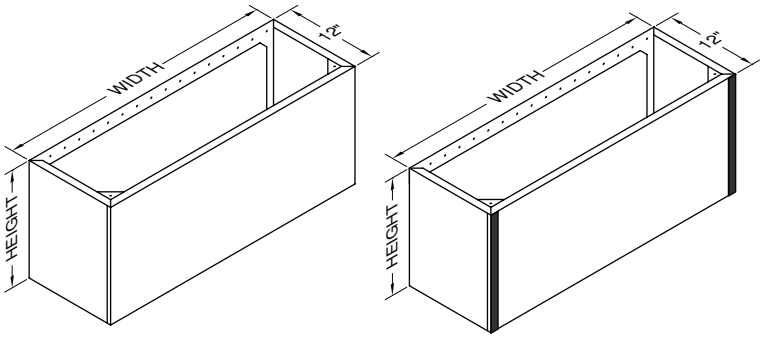

WALL MOUNT DUCT COVER OPTIONS

Model No.	Width	Height	Price	Ceiling
WDCM-30 SS	30"	12"	843	8'
WDCM-30/24 SS		24"	1,193	9'
WDCM-30/36 SS		36"	1,544	10'
WDCM-36 SS	36"	12"	912	8'
WDCM-36/24 SS		24"	1,333	9'
WDCM-36/36 SS		36"	1,749	10'
WDCM-42 SS	42"	12"	985	8'
WDCM-42/24 SS		24"	1,475	9'
WDCM-42/36 SS		36"	1,960	10'
WDCM-48 SS	48"	12"	1,052	8'
WDCM-48/24 SS		24"	1,612	9'
WDCM-48/36 SS		36"	2,169	10'
WDCM-54 SS	54"	12"	1,123	8'
WDCM-60 SS	60"	12"	1,193	8'
WDCM-66 SS	66"	12"	1,264	8'

USE XDCM MODEL NUMBER PREFIX FOR CXH18-M HOODS.
1" STAINLESS STEEL BANDS INCLUDED ON XDCM MODELS.
CEILING BASED ON REC. MAXIMUM HOOD MOUNTING HEIGHT.

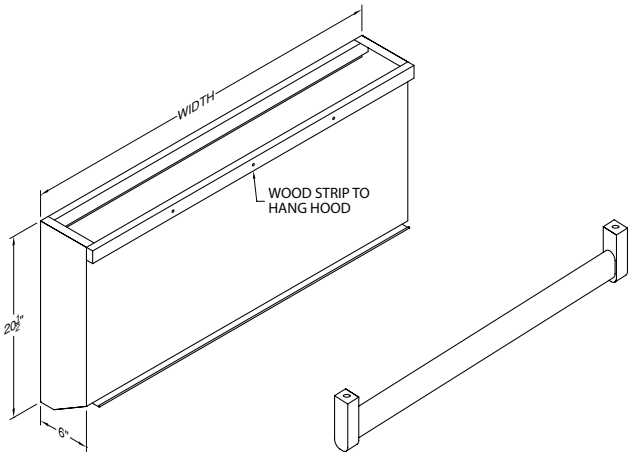

M SERIES BBQ EXTENSION

Model No.	Width	Price	WR Rail	Price
BBE-M30 SS	30"	742	WR-M30	164
BBE-M36 SS	36"	873	WR-M36	183
BBE-M42 SS	42"	956	WR-M42	183
BBE-M48 SS	48"	1,022	WR-M48	194
BBE-M54 SS	54"	1,097	WR-M54	194
BBE-M60 SS	60"	1,171	WR-M60	194

WR RAIL SOLD SEPARATELY
FOR USE ON CXH18-M, PRH18-M, AND PRXH18-M

THE INFORMATION IN THIS DOCUMENT IS SUBJECT TO CHANGE AT ANY TIME WITHOUT NOTICE.

M SERIES EURO-STYLE WALL MOUNT

REC. MOUNTING HEIGHT FROM COOKING SURFACE: 30"	***BLOWER ASSEMBLY REQUIRED (SOLD SEPARATELY)***

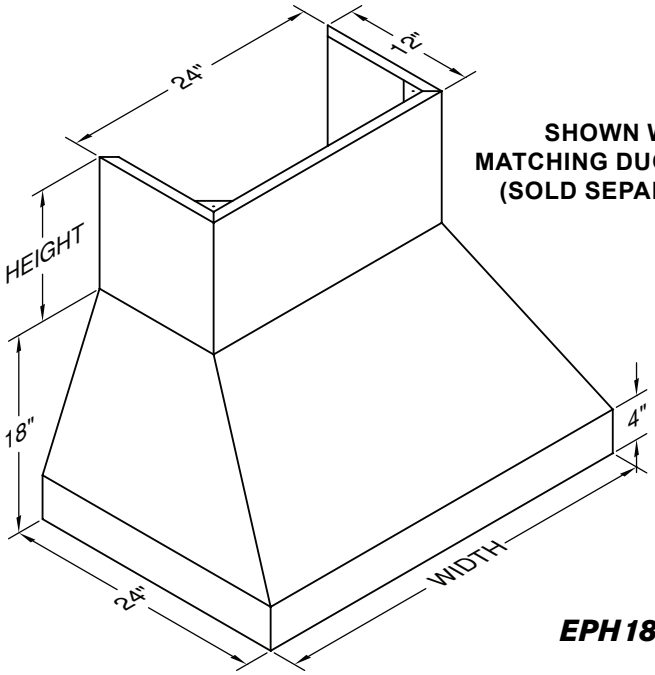

SHOWN WITH MATCHING DUCT COVER (SOLD SEPARATELY)

EPH18-M

EPH18-M

Model No.	Width	Price	# Lts	Filters
EPH18-M36 SS	36"	2,826	2	2
EPH18-M42 SS	42"	3,096	2	2
EPH18-M48 SS	48"	3,290	3	3

BLOWER SOLD SEPARATELY
STAINLESS STEEL BAFFLE FILTERS AND GU10 LIGHTING INCLUDED.

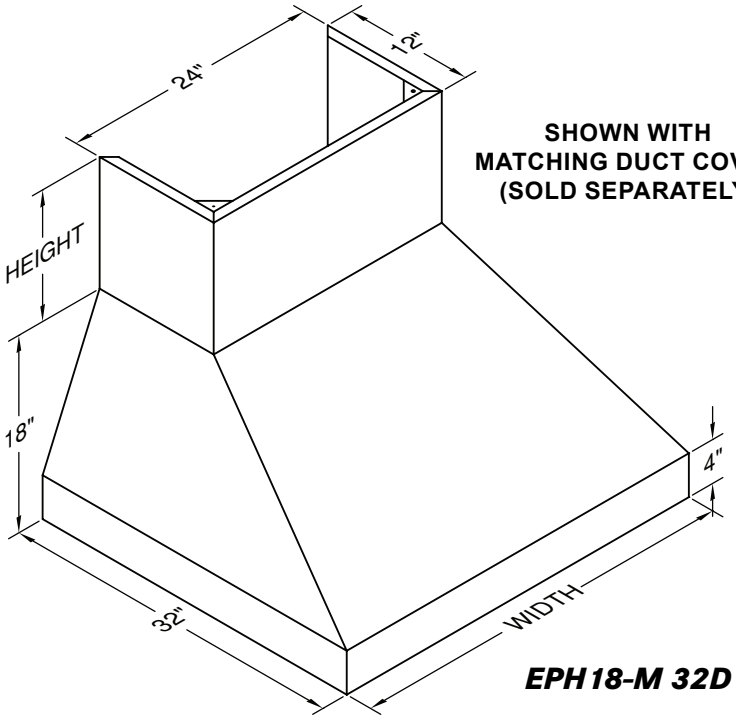

SHOWN WITH MATCHING DUCT COVER (SOLD SEPARATELY)

EPH18-M 32D

EPH18-M 32"D

Model No.	Width	Price	# Lts	Filters
EPH18-M36X32 SS	36"	4,151	2	2
EPH18-M42X32 SS	42"	4,531	2	2
EPH18-M48X32 SS	48"	4,829	3	3

BLOWER SOLD SEPARATELY
STAINLESS STEEL BAFFLE FILTERS AND GU10 LIGHTING INCLUDED.

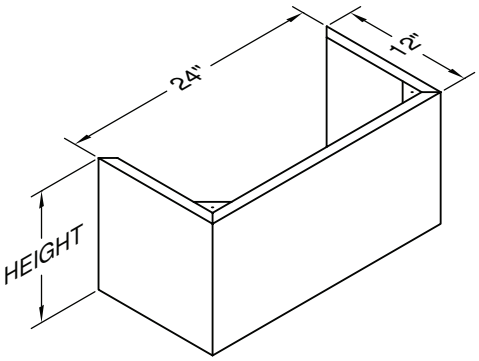

EURO WALL MOUNT DUCT COVERS

Model No.	Width	Height	Price	Ceiling
WDCM-24/12 SS	24"	12"	1,059	8'
WDCM-24/24 SS		24"	1,500	9'
WDCM-24/36 SS		36"	1,801	10'

CEILING BASED ON REC. MAXIMUM HOOD MOUNTING HEIGHT.

THE INFORMATION IN THIS DOCUMENT IS SUBJECT TO CHANGE AT ANY TIME WITHOUT NOTICE.

M SERIES WALL MOUNT LINER INSERTS & BLOWERS

REC. MOUNTING HEIGHT FROM COOKING SURFACE:
MSLD: 24"-27", MPSLD: 27"-30"

BLOWER ASSEMBLY REQUIRED
(SOLD SEPARATELY)

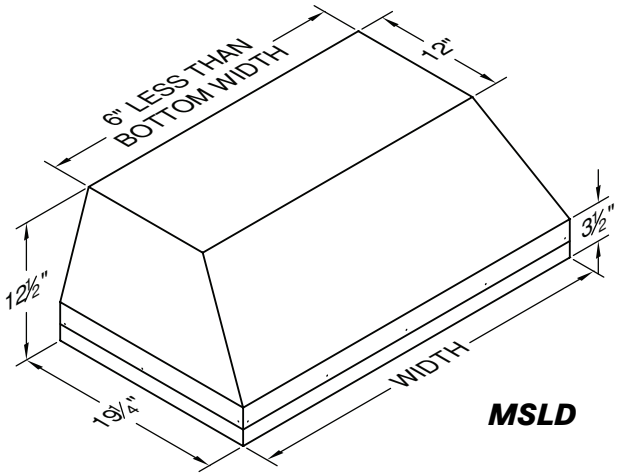

MSLD

MSLD

Model No.	Width	Price	# Lts	Filters
M28SLD SS	28 3/8"	1,123	2	2
M34SLD SS	34 3/8"	1,123	2	2
M40SLD SS	40 3/8"	1,243	2	2
M46SLD SS	46 3/8"	1,541	3	3
M52SLD SS	52 3/8"	2,675	3	3
M58SLD SS	58 3/8"	2,833	4	4
M64SLD SS	64 3/8"	3,233	4	4

BLOWER SOLD SEPARATELY
STAINLESS STEEL BAFFLE FILTERS AND GU10 LIGHTING INCLUDED.

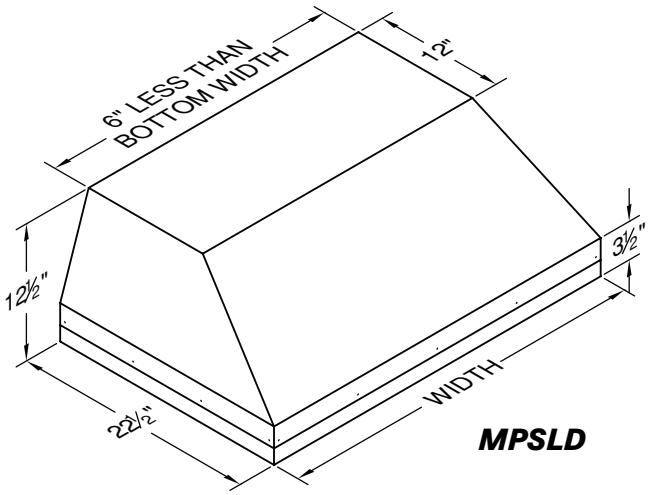

MPSLD

MPSLD

Model No.	Width	Price	# Lts	Filters
M28PSLD SS	28 3/8"	1,123	2	2
M34PSLD SS	34 3/8"	1,123	2	2
M40PSLD SS	40 3/8"	1,243	2	2
M46PSLD SS	46 3/8"	1,541	3	3
M52PSLD SS	52 3/8"	2,675	3	3
M58PSLD SS	58 3/8"	2,833	4	4
M64PSLD SS	64 3/8"	3,233	4	4

BLOWER SOLD SEPARATELY
STAINLESS STEEL BAFFLE FILTERS AND GU10 LIGHTING INCLUDED.

M600

BLOWER OPTIONS

Model No.	CFM+	Amps	Price	Incl. •	Duct Size
M600	630	5.0	745	N/A	6" Round
M1200	1035	10.0	1,434	VP566	10" Round
WHM300*	300	5.0	25	N/A	6" Round
WHM400*	400	5.0	25	N/A	6" Round

+ CFM RATING IS AT 0.0" STATIC PRESSURE
• VP566 TRANSITION IS PACKAGED SEPARATELY FROM M1200 BLOWER
* WHM300 IS A HARNESS TO BE USED WITH THE M600 WHICH LIMITS TO 300 CFM
* WHM400 IS A HARNESS TO BE USED WITH THE M600 WHICH LIMITS TO 400 CFM

M1200

THE INFORMATION IN THIS DOCUMENT IS SUBJECT TO CHANGE AT ANY TIME WITHOUT NOTICE.

THE INFORMATION IN THIS DOCUMENT IS SUBJECT TO CHANGE AT ANY TIME WITHOUT NOTICE.

VENTING ACCESSORIES

PRICES DO NOT INCLUDE SHIPPING & HANDLING CHARGES.

WALL LOUVER

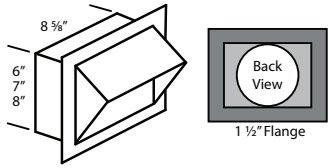

MODEL	DESCRIPTION	PRICE
VP526	6" Round	$124.00
VP527	7" Round	$124.00
VP528	8" Round	$124.00

WALL LOUVER

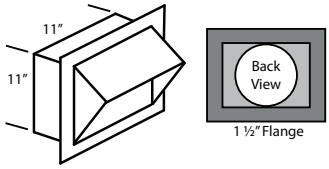

MODEL	DESCRIPTION	PRICE
VP554	10" Round	$176.00

WALL LOUVER

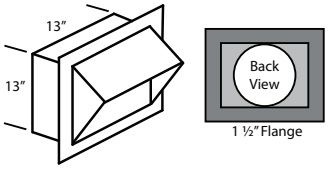

MODEL	DESCRIPTION	PRICE
VP555	12" Round	$176.00

RECTANGULAR WALL LOUVER

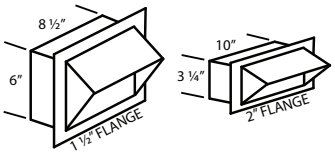

MODEL	DESCRIPTION	PRICE
VP538	6" x 8-1/2"	$124.00
VP560	3-1/4" x 10"	$89.00

LOW PROFILE ROOF JACK (MAXIMUM 4/12 PITCH)

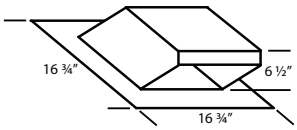

MODEL	DESCRIPTION	PRICE
VP539	6" Round	$124.00
VP540	7" Round	$124.00
VP541	8" Round	$124.00

LOW PROFILE ROOF JACK (MAXIMUM 4/12 PITCH)

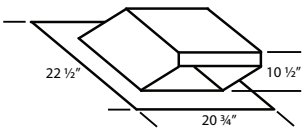

MODEL	DESCRIPTION	PRICE
VP552	10" Round	$266.00
VP553	12" Round	$266.00

LOW PROFILE ROOF JACK (MINIMUM 4/12 PITCH)

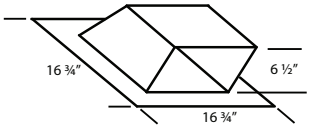

MODEL	DESCRIPTION	PRICE
VP539-HP	6" Round	$124.00
VP540-HP	7" Round	$124.00
VP541-HP	8" Round	$124.00

LOW PROFILE ROOF JACK (MINIMUM 4/12 PITCH)

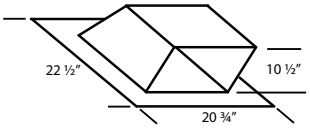

MODEL	DESCRIPTION	PRICE
VP552-HP	10" Round	$266.00
VP553-HP	12" Round	$266.00

ADJUSTABLE ELBOW

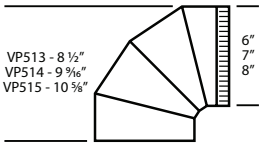

MODEL	DESCRIPTION	PRICE
VP513	6" Round	$37.00
VP514	7" Round	$37.00
VP515	8" Round	$37.00

BACK/SIDE VENT ELBOW

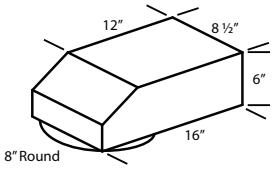

MODEL	DESCRIPTION	PRICE
VP561	8" to 6" x 8-1/2"	$50.00

3 ¼" x 10" BACK VENT ELBOW

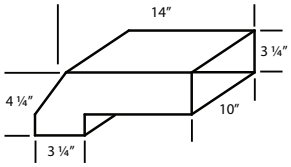

MODEL	DESCRIPTION	PRICE
VP559	3-1/4" x 10"	$50.00

3 ¼" x 10" TO 7" TRANSITION

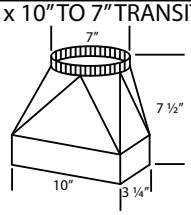

MODEL	DESCRIPTION	PRICE
VP521	3-1/4" x 10 to 7"	$50.00

MULTI-BLOWER TRANSITION

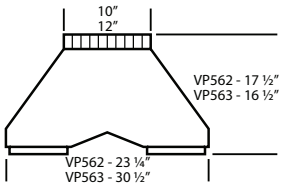

MODEL	DESCRIPTION	PRICE
VP562	6" & 8" to 10"	$266.00
VP563	8" & 8" to 12"	$266.00

M1200 STANDARD TRANSITION

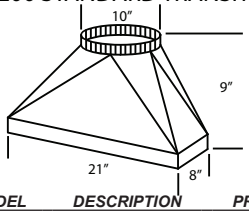

MODEL	DESCRIPTION	PRICE
VP566	M1200 Transition	$97.00

STANDARD ISLAND TRANSITION

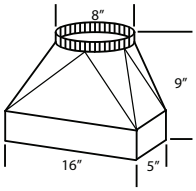

MODEL	DESCRIPTION	PRICE
VP565	5" x 16" to 8" Rnd	$97.00

CLUSTER BLOWER TRANSITION

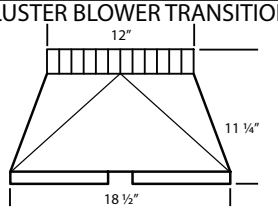

MODEL	DESCRIPTION	PRICE
VP564	8" & 8" to 12"	$97.00

OFFSET L & R TRANSITION FOR ISLAND BLOWERS

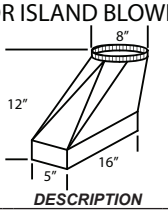

MODEL	DESCRIPTION	PRICE
VP542	Top Left	$97.00
VP543	Top Right	$97.00

SIDE VENT TRANSITION L & R FOR ISLAND BLOWERS

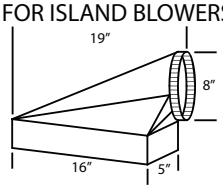

MODEL	DESCRIPTION	PRICE
VP544	Side Left	$97.00
VP545	Side Right	$97.00

OFFSET KIT - ROUND

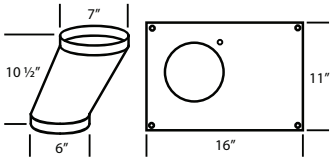

MODEL	DESCRIPTION	PRICE
VP529	6" Rnd to 7" Rnd	$50.00

OFFSET KIT - RECTANGULAR

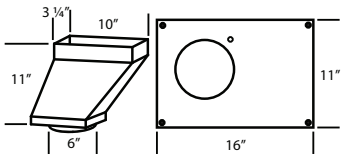

MODEL	DESCRIPTION	PRICE
VP550	6" to 3-1/4" x 10"	$50.00

"Y" TRANSITION

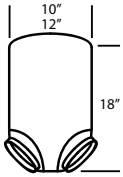

MODEL	DESCRIPTION	PRICE
VP517	8" & 8" to 12"	$111.00
VP518	6" & 8" to 12"	$111.00
VP551	6" & 8" to 10"	$111.00

ROUND DUCT PIPE

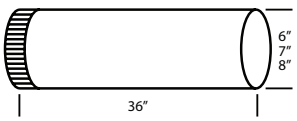

MODEL	DESCRIPTION	PRICE
VP500	6" Round	$42.00
VP501	7" Round	$42.00
VP502	8" Round	$42.00

3 ¼" RECTANGULAR DUCT PIPE

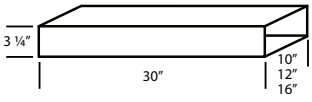

MODEL	DESCRIPTION	PRICE
VP504	3-1/4" x 10"	$42.00
VP505	3-1/4" x 12"	$42.00
VP506	3-1/4" x 16"	$42.00

6" RECTANGULAR DUCT PIPE

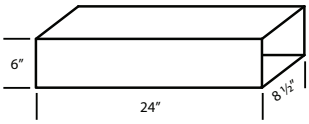

MODEL	DESCRIPTION	PRICE
VP507	6" x 8-1/2"	$42.00

THE INFORMATION IN THIS DOCUMENT IS SUBJECT TO CHANGE AT ANY TIME WITHOUT NOTICE.

REPLACEMENT PARTS

PRICES DO NOT INCLUDE SHIPPING & HANDLING CHARGES.

MOTORS

PART NO.	DESCRIPTION	PRICE
P1301-1	SINGLE SPEED WHITE MOTOR (CW)	$185.00
P1301-2	TWO SPEED WHITE MOTOR (CW)	$185.00
P1302-1	BLACK MOTOR (CCW)	$185.00
P1315	V-LINE MOTOR	$274.00
P1900	ADAPTER (AMP PLUG/TWO PRONG PLUG)	$11.00

BLOWER WHEELS

PART NO.	DESCRIPTION	PRICE
P1305	WHITE BLOWER WHEEL (CW)	$50.00
P1306	BLACK BLOWER WHEEL (CCW)	$50.00
P1307	V-LINE BLOWER WHEEL	$50.00

BLOWER HOUSINGS

PART NO.	DESCRIPTION	PRICE
SPECIFY HOOD COLOR		
P1029	B100/T200 BLOWER HSG w/DAMPER	$152.00
P1029E	B100/T200 EZ CLEAN HSG w/DAMPER	$152.00
P1028	B200/T400 BLOWER HSG w/DAMPERS	$293.00
P1028E	B200/T400 EZ CLEAN HSG w/DAMPERS	$293.00
P1030	T200 REVERSE BLOWER HSG w/DAMPER	$152.00
P1030E	T200 REVERSE EZ CLEAN HSG w/DAMPER	$152.00
P1021	V-LINE BLOWER COVER (PAN)	$69.00

BLOWER SHIELDS

PART NO.	DESCRIPTION	PRICE
P1025	B100/T200 SHIELD, PAINTED	$53.00
P1025E	B100 EZ CLEAN SHIELD, PAINTED	$53.00
P1025E-I	T200 EZ CLEAN SHIELD, PAINTED	$53.00
P1027	B100/T200 SHIELD, STAINLESS	$53.00
P1027E	B100 EZ CLEAN SHIELD, STAINLESS	$53.00
P1027E-I	T200 EZ CLEAN SHIELD, STAINLESS	$53.00
P1024	B200/T400 SHIELD, PAINTED	$69.00
P1024E	B200 EZ CLEAN SHIELD, PAINTED	$69.00
P1024E-I	T400 EZ CLEAN SHIELD, PAINTED	$69.00
P1026	B200/T400 SHIELD, STAINLESS	$69.00
P1026E	B200 EZ CLEAN SHIELD, STAINLESS	$69.00
P1026E-I	T400 EZ CLEAN SHIELD, STAINLESS	$69.00
P1610P	NICKEL SHIELD SCREW	$11.00

SWITCHES AND CONTROLS

PART NO.	DESCRIPTION	PRICE
P1431	SWITCH FOR SINGLE SPEED BLACK MOTOR	$11.00
P1432	SWITCH FOR FLUORESCENT LIGHT	$11.00
P1433	SWITCH FOR TWO SPEED WHITE MOTOR	$14.00
P1434	SWITCH FOR HALOGEN LIGHTS	$14.00
P1435	LED ROCKER SWITCH	$14.00
P1410	MOMENTARY SWITCH (TILT/TLH HOODS)	$11.00
P1418	DIMMER SWITCH (CAN LIGHTS)	$83.00
P1419	ROTARY SWITCH (HEAT LIGHTS)	$28.00
P1422	KNOB FOR ROTARY SWITCH (SET SCREW)	$11.00
P1425	REMOTE BLOWER SPEED CONTROL (HOOD)	$160.00
P1460	ROTARY SWITCH - B100/LED LIGHTS	$14.00
P1465	ROTARY SWITCH - B200/T200/T400(2)	$14.00
P1470-1	MAGIC LUNG ROTARY BLOWER KNOB	$19.00
P1475-1	MAGIC LUNG ROTARY LIGHT KNOB	$19.00
P1350-1	DIMMER PACK FOR INTEGRATED LED BULB	$27.00

M LINE COMPONENTS

PART NO.	DESCRIPTION	PRICE
P1440	M LINE BLOWER SWITCH	$41.00
P1445	M LINE BLOWER SWITCH KNOB	$19.00
P1450	M LINE LIGHT SWITCH	$41.00
P1455	M LINE LIGHT SWITCH KNOB	$19.00
P1456	M600 WIRING HARNESS	$124.00
P1457	M1200 WIRING HARNESS	$124.00

LIGHT BULBS

PART NO.	DESCRIPTION	PRICE
P1110	GU10 HALOGEN BULB, 50 WATT	$30.00
P1111	GU10 LED BULB	$38.00
P1130	PAR20 HALOGEN BULB, 50 WATT	$30.00
P1350	INTEGRATED LED BULB (2700K)	$115.00
P1355	INTEGRATED LED BULB (5000K)	$115.00

LIGHT FIXTURE COMPONENTS

PART NO.	DESCRIPTION	PRICE
P1103	LEFT LAMPHOLDER	$11.00
P1104	RIGHT LAMPHOLDER	$11.00
P1105	FS-2 STARTER	$6.00
P1106	STARTER SOCKET	$14.00
P1123	PAR20 HALOGEN LAMP SOCKET	$11.00
P1124	GU10 LAMP SOCKET	$18.00
P1127	FLUORESCENT LIGHT DIFFUSER	$28.00

REPLACEMENT FILTERS

PART NO.	DESCRIPTION	PRICE
P1506	SS BAFFLE (16" x 20" x 1-1/2")	$414.00
P1506A	SS BAFFLE (10" x 20" x 1-1/2")	$483.00
P1529	M LINE BAFFLE FILTER - 15" x 12"	$210.00
P1530	M LINE BAFFLE FILTER - 12" x 12"	$210.00
P1531	M LINE FILTER FILLER PLATE - 6" x 12"	$89.00

BACK DRAFT DAMPERS

PART NO.	DESCRIPTION	PRICE
P1031	MAGIC LUNG NYLON POLYMER DAMPER	$14.00
P1040	B100/T200 METAL DAMPER	$14.00
P1041	B200 METAL DAMPER	$14.00
P1042	V-LINE DAMPER	$19.00

REMOTE BLOWER COMPONENTS

PART NO.	DESCRIPTION	PRICE
P1425	REMOTE BLOWER SPEED CONTROL (HOOD)	$160.00
P1510	RM1000 BLOWER WHEEL	$97.00
P1515	RM1000 MOTOR	$566.00
P1520	RM1500 BLOWER WHEEL	$97.00
P1525	RM1500 MOTOR	$649.00

OTHER MISCELLANEOUS ITEMS

PART NO.	DESCRIPTION	PRICE
P1039	FLAP STAY FOR TILT/TLH HOODS	$77.00
AW101	T-HANDLE, 1/8" ALLEN WRENCH	$28.00
AW102	STANDARD, 1/8" ALLEN WRENCH	$3.00
P1424	SENSASOURCE THERMOSTAT ASSY	$33.00
SS KIT	STAINLESS STEEL SCRATCH REPAIR KIT	$22.00
SS64	NO LONGER AVAILABLE	N/A
CP101	NO LONGER AVAILABLE	N/A
P1316	3-1/4" x 10" COLLAR FOR V-LINE	$28.00
P1317	BACK PLATE FOR V-LINE	$14.00

THE INFORMATION IN THIS DOCUMENT IS SUBJECT TO CHANGE AT ANY TIME WITHOUT NOTICE.

1000 N. Greenville Ave.
Richardson, Texas 75081-2799

TELEPHONE: 972.235.5201
TOLL-FREE: 800.331.2492
FAX: 972.231.0663